Instructions For Use

Allegra V-15R Rotors

For Use in the Beckman Coulter
Allegra V-15R Centrifuge

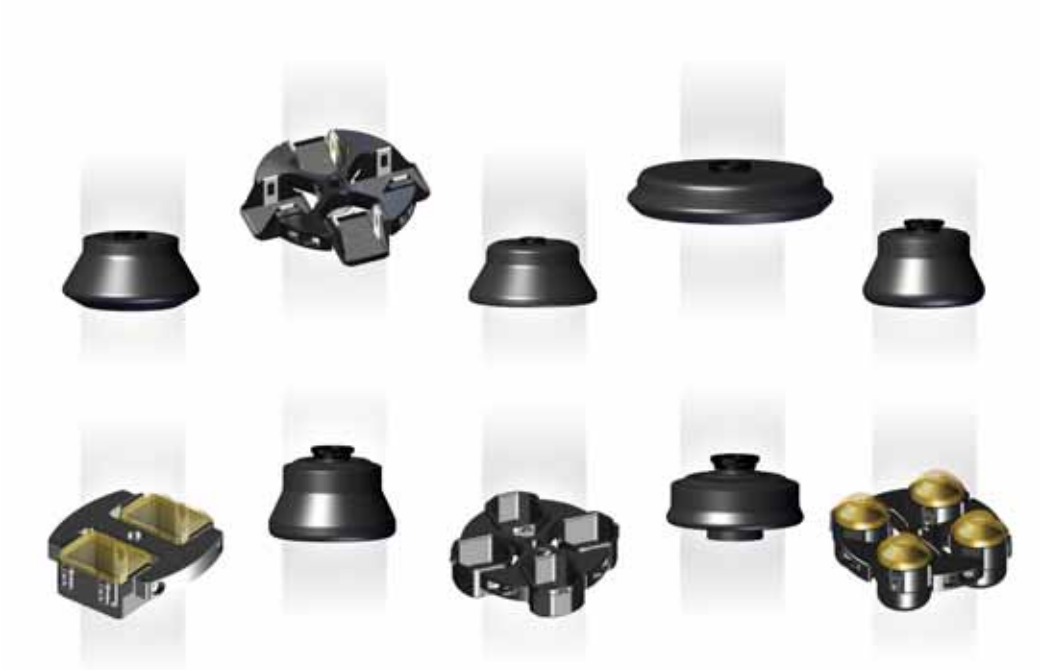

PN C63132AD
May 2023

Beckman Coulter, Inc.
250 S. Kraemer Blvd.
Brea, CA 92821 U.S.A.

BECKMAN COULTER

Allegra V-15R Rotors Instructions For Use
PN C63132AD (May 2023)

© 2023 Beckman Coulter, Inc.
All rights reserved.

Beckman Coulter, the stylized logo, and the Beckman Coulter product and service marks mentioned herein are trademarks or registered trademarks of Beckman Coulter, Inc. in the United States and other countries.

All other trademarks, service marks, products, or services are trademarks or registered trademarks of their respective holders.

Contact Us

If you have any questions, contact our Customer Support Center.

- Worldwide, find us via our website at www.beckman.com/support/technical
- In the USA and Canada, call us at 1-800-369-0333.
- In Austria, call us at 0810 300484
- In Germany, call us at 02151 333999
- In Sweden, call us at +46 (0)8 564 859 14
- In the Netherlands, call us at +31 348 799 815
- In France, call us at 0825838306 6
- In the UK, call us at +44 845 600 1345
- In Ireland, call us at +353 (01) 4073082
- In Italy, call us at +39 0295392 456
- In other locales, contact your local Beckman Coulter Representative.

Find us on the World Wide Web at:
www.beckman.com

EC REP

Beckman Coulter Eurocenter S.A.
22, rue Juste-Olivier
Case Postale 1044
CH - 1260 Nyon 1, Switzerland
Tel: +41 (0) 22 365 36 11

Glossary of Symbols is available at beckman.com/techdocs (PN C24689).

May be covered by one or more pat. - see www.beckman.com/patents

Original Instructions

Revision Status

For updates, go to beckman.com/techdocs and download the most recent manual or system help for your instrument.

Initial Issue C63132AA, 10/2021

Issue AB, 02/2022

Changes or additions were made to the following:

Safety Notice, Mechanical Safety.

CHAPTER 1, Allegra V-15R Rotor Specifications, VS 4.750-96 Swinging-Bucket Rotor Specifications; CHAPTER 1, Allegra V-15R Rotor Specifications, VF 100.2 Fixed-Angle Rotor Specifications, Table 1.12, Beckman Coulter Adapters for the VF 100.2 Rotor and Table 1.13, Commercially Available Tubes for the VF 100.2 Rotor.

CHAPTER 2, Rotor Preparation and Operation, Bio-Safety; CHAPTER 2, Rotor Preparation and Operation, Fixed-Angle Rotor Preparation; CHAPTER 2, Rotor Preparation and Operation, Swinging-Bucket Rotor Preparation, Installing the Rotor Yoke.

CHAPTER 3, Allegra V-15R Rotor Maintenance, Care and Maintenance, Fixed-Angle Rotor Maintenance; CHAPTER 3, Allegra V-15R Rotor Maintenance, Care and Maintenance, Fixed-Angle Rotor Maintenance, Cleaning; Allegra V-15R Rotor Maintenance, Care and Maintenance, Swinging-Bucket Rotor Maintenance.

Issue AC, 02/2023

Changes or additions were made to the following:

Safety Notice, Chemical and Biological Safety; Allegra V-15R Rotors Safety Messages.

Introduction, Manual Overview..

CHAPTER 1, Allegra V-15R Rotor Specifications, VF 48.2 Fixed-Angle Rotor Specifications;; VFC 8.50 Fixed-Angle Rotor Specifications, Table 1.4, Beckman Coulter Tubes and Bottles for the VFC 8.50 Rotor and Table 1.5, Beckman Coulter Adapters for the VFC 8.50 Rotor, VF 6.94 Fixed-Angle Rotor Specifications, Table 1.7, Beckman Coulter Bottles and Tubes for the VF 6.94 Rotor, Table 1.8, Beckman Coulter Adapters for the VF 6.94 Rotor; VS 4.750 Swinging-Bucket Rotor Specifications, VS 4.750 Rotor Description, , Table 1.19, Beckman Coulter Adapters for the VS 4.750 Rotor; VS 4.750-Hex Swinging-Bucket Rotor Specifications, VS 4.750-Hex Rotor Description; Table 1.21, Beckman Coulter Adapters for the VS 4.750-Hex Rotor; Table 1.22, Beckman Coulter Replacement Parts for the VS 4.750-Hex Rotor; VS 4.750-96 Swinging-Bucket Rotor Specifications, VS 4.750-96 Rotor Description; Table 1.24, Beckman Coulter Replacement Parts for the VS 4.750-96 Rotor; VS 2.5-96 Swinging-Bucket Rotor Specifications, VS 2.5-96 Rotor Description, VS 2.5-96 Labware for Use with Multi-well Plate Carriers.

CHAPTER 2, Rotor Preparation and Operation, Bio-Safety; Accessories, Bottle Adapters; Multi-well Plate Carriers; Swinging-Bucket Rotor Preparation, Symmetrical and Balanced Loading, Using Tube and Bottle Buckets, Using Bucket Covers, Loading Buckets Onto the Yoke; Using Multi-well Plate Carriers, Symmetrical and Balanced Loading; Operation, Removal and Sample Recovery; Run Speeds.

CHAPTER 3, Allegra V-15R Rotor Maintenance, Care and Maintenance, Fixed-Angle Rotor Maintenance, Cleaning; Swinging-Bucket Rotor Maintenance, Cleaning; Care and Maintenance, Decontamination, Sterilization and Disinfection, Tube Breakage (Including SST or Corvac Tubes); Supply List, Allegra V-15R Rotor Supplies.

APPENDIX A, Additional Run Configurations, Appendix A Overview; Centrifugation With Different Tube Sizes, Centrifugation With Some Empty Tube Locations.

Issue AD, 05/2023

Changes or additions were made to the following:

Chapter 1, Allegra V-15R Rotor Specifications

- VS 4.750 Rotor Description
- Table 1.18, Beckman Coulter Bottles and Tubes for the VS 4.750 Rotor
- Table 1.19, Beckman Coulter Adapters for the VS 4.750 Rotor

Chapter 2, Allegra V-15R Rotor Specifications

- Bio-Safety

Note: Changes that are part of the most recent revision are indicated in text by a bar in the left margin of the amended page.

Safety Notice

Read all product manuals and consult with Beckman Coulter-trained personnel before attempting to operate the instrument. Do not attempt to perform any procedure before carefully reading all instructions. Always follow product labeling and manufacturer's recommendations. If in doubt as to how to proceed in any situation, Contact us.

Beckman Coulter, Inc. urges customers and employees to comply with all national health and safety standards such as the use of barrier protection. This may include, but is not limited to, protective eyewear, gloves, and suitable laboratory attire when operating or maintaining this or any other automated laboratory instrumentation.

⚠ WARNING

If the equipment is used in a manner not specified by Beckman Coulter, Inc., the protection provided by the equipment may be impaired.

⚠ CAUTION

If you purchased this product from anyone other than Beckman Coulter or an authorized Beckman Coulter distributor, and, if it is not presently under a Beckman Coulter Service Maintenance Agreement, Beckman Coulter cannot guarantee that the product is fitted with the most current mandatory engineering revisions or that you will receive the most current information bulletins concerning the product. If you purchased this product from a third party and would like further information concerning this topic, contact us.

Alerts for Danger, Warning, Caution, and Note

All Warnings and Cautions in this document include an exclamation point, framed within a triangle.

The exclamation point symbol is an international symbol which serves as a reminder that all safety instructions should be read and understood before installation, use, maintenance, and servicing are attempted.

⚠ DANGER

DANGER indicates an imminently hazardous situation which, if not avoided, will result in death or serious injury.

⚠ WARNING

WARNING indicates a potentially hazardous situation which, if not avoided, could result in death or serious injury.

⚠ CAUTION

CAUTION indicates a potentially hazardous situation, which, if not avoided, may result in minor or moderate injury. It may also be used to alert against unsafe practices.

IMPORTANT IMPORTANT is used for comments that add value to the step or procedure being performed. Following the advice in the IMPORTANT adds benefit to the performance of a piece of equipment or to a process.

NOTE NOTE is used to call attention to notable information that should be followed during installation, use, or servicing of this equipment.

Allegra V-15R Rotor Safety Precautions

IMPORTANT These rotors were developed, manufactured, and tested for safety and reliability as part of a Beckman Coulter centrifuge/rotor system. Their safety or reliability cannot be assured if used in a centrifuge not of Beckman Coulter's manufacture or in a Beckman Coulter centrifuge that has been modified without Beckman Coulter's approval.

NOTE Although rotor components and accessories made by other manufacturers may fit in these rotors, their safety cannot be ascertained by Beckman Coulter. Use of other manufacturers' components or accessories in the Allegra V-15R rotors may void the warranty, and should be prohibited by your laboratory safety officer. Only the components and accessories listed in this publication should be used with these rotors.

Safety During Installation and/or Maintenance

⚠ WARNING

Risk of injury or equipment damage. Vapors from flammable reagents or combustible fluids could enter the centrifuge air system and be ignited by the motor. Do not use the centrifuge in the vicinity of flammable liquids or vapors, and do not run such materials in the instrument.

Perform only the maintenance described in the appropriate User's Manual for the Allegra V-15R Centrifuge. Maintenance other than that specified in the User's Manual should be performed only by a Beckman Coulter Representative.

IMPORTANT It is your responsibility to decontaminate components of the instrument before requesting service by a Beckman Coulter Representative or returning parts to Beckman Coulter for repair. Beckman Coulter will NOT accept any items which have not been decontaminated where it is appropriate to do so. If any parts are returned, they must be enclosed in a sealed plastic bag stating that the contents are safe to handle and are not contaminated.

Any servicing of this equipment that requires removal of any covers can expose parts that involve the risk of electric shock or personal injury. Make sure that the power switch is off and the

centrifuge is disconnected from the main power source by removing the Mains (power) plug from the outlet receptacle, and refer such servicing to qualified personnel.

Do not replace any centrifuge components with parts not specified for use on this instrument.

⚠ WARNING

Risk of personal injury. Use appropriate lifting techniques when installing this rotor into or removing it from the instrument.

Radiation Safety



Use universal precautions when working with radioactive materials. Means must be available to decontaminate the instrument and dispose of radioactive waste.

Chemical and Biological Safety



Use universal precautions when working with pathogenic materials. Means must be available to decontaminate the instrument and to dispose of biohazardous waste.

NOTE Observe all warnings and cautions listed for any external devices attached or used during operation of the instrument. Refer to applicable external device user's manuals for operating procedures of that device.

NOTE For Safety Data Sheets (SDS) information, go to the Beckman Coulter website at https://www.beckman.com/techdocs.

⚠ WARNING

Risk of chemical injury from bleach. To avoid contact with the bleach, use barrier protection, including protective eyewear, gloves, and suitable laboratory attire. Refer to the Safety Data Sheet for details about chemical exposure before using the chemical.

⚠ WARNING

Risk of personal injury or equipment damage. Ethanol is a flammability hazard. Do not use it in or near operating centrifuges.

⚠ WARNING

Risk of personal injury or property damage. The rotors and accessories are not designed for use with materials capable of developing flammable or explosive vapors. Do not centrifuge such materials in, nor handle or store them near the centrifuge. Always observe appropriate cautionary procedures as defined by your safety officer when using flammable solvents.

⚠ WARNING

Risk of personal injury or contamination. Before running with chemical or biological samples, test new labware types to determine if normal operation of the rotor may involve the use of materials that are toxic, flammable, or otherwise biologically harmful. When using such materials, observe the following precautions:

- Handle infectious samples according to good laboratory procedures and methods to prevent the spread of disease.
- Observe all cautionary information printed on the original solutions' containers prior to their use.
- Dispose of all waste solutions according to your facility's waste disposal procedures.
- Operate the instrument in accordance with the instructions outlined in this manual and take all the necessary precautions when using pathological, toxic, or radioactive materials.
- Splashing of liquids may occur; therefore, take appropriate safety precautions, such as using safety glasses and wearing protective clothing, when working with potentially hazardous liquids.
- Use an appropriately-contained environment when using hazardous materials.
- Observe the appropriate cautionary procedures as defined by your safety officer when using flammable solvents in or near a powered-up instrument.
- Always observe appropriate cautionary procedures as defined by your safety officer when using flammable solvents or toxic, pathological, or radioactive materials.

⚠ WARNING

Risk of contamination. Handle body fluids with care because they can transmit disease. No known test offers complete assurance that such fluids are free of micro-organisms. Some of the most virulent—Hepatitis (B and C) viruses, HIV (I-V), atypical mycobacteria, and certain systemic fungi—further emphasize the need for aerosol protection. Handle other infectious samples according to good laboratory procedures and methods to prevent spread of disease. Because spills may generate aerosols, observe proper safety precautions for aerosol containment.

⚠ WARNING

Risk of personal injury or contamination. Do not run toxic, pathogenic, or radioactive materials in this rotor without taking appropriate safety precautions. Biosafe containment should be used when Risk Group II materials (as identified in the World Health Organization *Laboratory Biosafety Manual*) are handled; materials of a higher group require more than one level of protection.

⚠ WARNING

Risk of contamination. If disassembly reveals evidence of leakage, you should assume that some fluid escaped the rotor. Apply appropriate decontamination procedures to the centrifuge and accessories as determined by your laboratory safety officer.

Mechanical Safety

⚠ WARNING

Risk of personal injury. To avoid injury due to moving parts, observe the following:

- Before starting the centrifuge, make sure that the rotor tie-down screw is securely fastened.
- Never attempt to exchange labware or reagents while the instrument is operating.
- Never attempt to physically restrict any of the moving components of the instrument.
- NEVER attempt to slow or stop a rotor by hand.
- Keep the instrument work area clear to prevent obstruction of the movement.

Rotors are designed for use at the speeds indicated; however, speed reductions may be required because of weight considerations of tubes, adapters, and/or the density of the solution being centrifuged. Be sure to observe the instructions in this manual.

The strength of containers can vary between lots, and will depend on handling and usage. We highly recommend that you pretest them in the rotor (using buffer or gradient of equivalent density to the intended sample solution) to determine optimal operating conditions. Scratches (even microscopic ones) significantly weaken glass and polycarbonate containers.

To help prevent premature failures or hazards by detecting stress corrosion, metal fatigue, wear or damage to anodized coatings, and to instruct laboratory personnel in the proper care of rotors, Beckman Coulter offers the Field Rotor Inspection Program (FRIP). This program involves a visit to your laboratory by a specially trained Beckman Coulter representative, who will inspect all of your rotors for corrosion or damage. The representative will recommend repair or replacement of at risk rotors to prevent potential rotor failures. Contact us to request this service.

Cleaning

Observe the cleaning procedures outlined in this user's manual for the rotor. Prior to cleaning equipment that has been exposed to hazardous material:

- Contact the appropriate Chemical and Biological Safety personnel.
- Review the Chemical and Biological Safety information in the user's manual.

Maintenance

Perform only the maintenance described in this manual. Maintenance other than that specified in this manual should be performed only by your Beckman Coulter Representative.

IMPORTANT It is your responsibility to decontaminate components of the instrument before requesting service by a Beckman Coulter Representative or returning parts to Beckman Coulter. Beckman Coulter will NOT accept any items which have not been decontaminated where it is appropriate to do so. If any parts are returned, they must be enclosed in a sealed plastic bag stating that the contents are safe to handle and are not contaminated.

Disposal

Clean and decontaminate the rotor per the Care and Maintenance section of this manual before disposal. Users are encouraged to check with local waste disposal authorities for specific disposal requirements.

Allegra V-15R Rotors Safety Messages

⚠ WARNING

Risk of personal injury or contamination. Do not run toxic, pathogenic, or radioactive materials in this rotor without taking appropriate safety precautions. Biosafe containment should be used when Risk Group II materials (as identified in the World Health Organization *Laboratory Biosafety Manual*) are handled; materials of a higher group require more than one level of protection.

⚠ WARNING

Risk of personal injury or contamination. Tubes and well plates can break during centrifugation. When working with potentially hazardous materials, open cannisters in an appropriate hood or biological safety cabinet. Consult your laboratory safety officer regarding the proper methods to use.

⚠ WARNING

Risk of contamination. If disassembly of the buckets or carriers reveals evidence of leakage, you should assume that some fluid escaped the rotor. Apply appropriate decontamination procedures to the centrifuge and accessories as determined by your laboratory safety officer.

⚠ WARNING

Risk of contamination. If the rotor or accessories are contaminated with toxic or pathogenic solutions, follow appropriate decontamination procedures as determined by your laboratory safety officer.

⚠ WARNING

Risk of contamination or equipment damage. Tubes and well plates can break during centrifugation. To reduce the potential for corrosion, clean rotors, adapters, buckets or carriers thoroughly immediately following a tube or well plate breakage, according to your laboratory safety procedures.

⚠ CAUTION

Risk of equipment damage. Salts and other corrosive materials can damage the rotor and rotor components. Wash the rotor and rotor components immediately if salts or other corrosive materials are used or if spillage has occurred, according to your laboratory safety procedures. Do not allow corrosive materials to dry on rotors or buckets.

⚠ CAUTION

Risk of equipment damage. The VS 4.750 rotor yoke supports three different bucket types. Always select the correct bucket to ensure that rotor speed limits are enforced.

⚠ CAUTION

Risk of contamination. Buckets are designed to be used only with bottle sleeves and bottle adapters. Do not pour samples directly into buckets, bottle sleeves or bottle adapters. Do not load bottles or tubes directly into the buckets. Do not use labware that is not specified for use with the rotor.

Note: The 750 mL bottle (PN C63392) is an exception to this. It must be loaded directly into the bucket.

⚠ CAUTION

Risk of equipment damage. Corrosion begins in scratches and may open fissures in the rotor assembly with continued use. Do not use sharp tools on the rotor assembly that could cause scratches on the rotor surfaces.

⚠ CAUTION

Risk of contamination or equipment damage. Rotors operated with improperly balanced loads can cause breakage or contamination. Make sure that filled containers are loaded symmetrically into the rotor and that opposing bottles or tubes are filled to the same level with liquid of the same density.

⚠ CAUTION

Risk of equipment damage. Never run the VS 4.750, VS 4.750-Hex, or VS 4.750-96 swinging-bucket rotors with only two positions filled. All four positions on these rotors must contain buckets or carriers during a run. Attach all four buckets or carriers, loaded or empty, to the rotor yoke. If only two buckets are filled, place them in opposite positions on the yoke.

⚠ CAUTION

Risk of equipment damage. The drive shaft can be damaged if a rotor is forced sideways or dropped onto it. Never force or drop the rotor onto the centrifuge drive shaft.

⚠ CAUTION

Operating the centrifuge at speeds above those recommended for the rotor, buckets or carriers (when applicable) and labware can cause breakage. Never exceed the maximum rated speed of the rotor, bucket, and labware in use.

Contents

Revision Status, iii

Safety Notice, v

Alerts for Danger, Warning, Caution, and Note, v

Allegra V-15R Rotor Safety Precautions, vi
- Safety During Installation and/or Maintenance, vi

Radiation Safety, vii

Chemical and Biological Safety, vii

Mechanical Safety, ix

Cleaning, x

Maintenance, x

Disposal, x

Allegra V-15R Rotors Safety Messages, x

Introduction, xxi

Manual Overview, xxi

CHAPTER 1: Allegra V-15R Rotor Specifications, 1-1

Allegra V-15R Rotors Specifications Overview, 1-1

VF 48.2 Fixed-Angle Rotor Specifications, 1-2
- VF 48.2 Rotor Description, 1-3
- VF 48.2 Adapters, 1-4
- VF 48.2 Tubes , 1-4
- VF 48.2 Replacement Parts, 1-5

VFC 8.50 Fixed-Angle Rotor Specifications, 1-6
- VFC 8.50 Rotor Description, 1-7
- VFC 8.50 Tubes, Bottles and Adapters, 1-8
- VFC 8.50 Replacement Parts, 1-9

VF 6.94 Fixed-Angle Rotor Specifications, 1-10
- VF 6.94 Rotor Description, 1-11
- VF 6.94 Bottles, Tubes and Adapters, 1-12
- VF 6.94 Replacement Parts, 1-13

VFC 24.15 Fixed-Angle Rotor Specifications, 1-14
- VFC 24.15 Rotor Description, 1-15
- VFC 24.15 Tubes , 1-16
- VFC 24.15 Replacement Parts, 1-16

VF 100.2 Fixed-Angle Rotor Specifications, 1-17
VF 100.2 Rotor Description, 1-18
VF 100.2 Adapters, 1-19
VF 100.2 Tubes , 1-20
VF 100.2 Replacement Parts, 1-20

VF 6.250 Fixed-Angle Rotor Specifications, 1-21
VF 6.250 Rotor Description, 1-22
VF 6.250 Bottles, Tubes and Adapters, 1-23
VF 6.250 Replacement Parts, 1-25

VS 4.750 Swinging-Bucket Rotor Specifications, 1-26
VS 4.750 Rotor Description, 1-27
VS 4.750 Bottles, Tubes and Adapters, 1-28
VS 4.750 Replacement Parts, 1-31

VS 4.750-Hex Swinging-Bucket Rotor Specifications, 1-33
VS 4.750-Hex Rotor Description, 1-34
VS 4.750-Hex Adapters, 1-35
VS 4.750-Hex Replacement Parts, 1-36

VS 4.750-96 Swinging-Bucket Rotor Specifications, 1-37
VS 4.750-96 Rotor Description, 1-38
VS 4.750-96 Labware for Use with Multi-well Plate Carriers, 1-39
VS 4.750-96 Replacement Parts, 1-40

VS 2.5-96 Swinging-Bucket Rotor Specifications, 1-41
VS 2.5-96 Rotor Description, 1-42
VS 2.5-96 Labware for Use with Multi-well Plate Carriers, 1-43
VS 2.5-96 Replacement Parts, 1-43

CHAPTER 2: Rotor Preparation and Operation, 2-1

Chapter Overview, 2-1

Bio-Safety, 2-2

Rotor Serial Number, 2-3

Automatic Rotor Identification, 2-3

Accessories, 2-3
Tubes and Bottles, 2-3
Temperature Limits, 2-4
Thickwall Tubes, 2-4
Polycarbonate and Polypropylene Bottles, 2-4
Bottle Adapters, 2-4
Multi-well Plate Carriers, 2-5

Run Preparation, 2-6
Prerun Safety Checks, 2-6

Fixed-Angle Rotor Preparation, 2-7

Swinging-Bucket Rotor Preparation, 2-9
Installing the Rotor Yoke, 2-10

Loading the Buckets, 2-11
Symmetrical and Balanced Loading, 2-12
Using Tube and Bottle Buckets, 2-13
Using Tubes, Bottles, and Buckets, 2-13
Loading Buckets Onto the Yoke, 2-15
Using Multi-well Plate Carriers, 2-15
Symmetrical and Balanced Loading, 2-15

Operation, 2-18
Removal and Sample Recovery, 2-18

Run Speeds, 2-19

CHAPTER 3: Allegra V-15R Rotor Maintenance, 3-1

Chapter Overview, 3-1

Care and Maintenance, 3-2
Fixed-Angle Rotor Maintenance, 3-2
Cleaning, 3-3
Swinging-Bucket Rotor Maintenance, 3-4
Cleaning, 3-5
Decontamination, 3-6
Sterilization and Disinfection, 3-7
Tube Breakage (Including SST or Corvac Tubes), 3-9
Disposal Information, 3-10
Storage, 3-10

Troubleshooting, 3-10

Returning a Rotor, 3-10

Supply List, 3-11
Allegra V-15R Rotor Supplies, 3-11

APPENDIX A: Additional Run Configurations, A-1

Appendix A Overview, A-1
Centrifugation With Different Tube Sizes, A-1
Centrifugation With Some Empty Tube Locations, A-1

Glossary

Beckman Coulter, Inc.
Allegra V-15R Rotors Warranty

Related Documents

Illustrations

1.1 VF 48.2 Fixed-Angle Rotor, 1-3

1.2 VFC 8.50 Fixed-Angle Rotor, 1-7

1.3 VF 6.94 Fixed-Angle Rotor, 1-11

1.4 VFC 24.15 Fixed-Angle Rotor, 1-15

1.5 VF 100.2 Fixed-Angle Rotor, 1-18

1.6 VF 6.250 Fixed-Angle Rotor, 1-22

1.7 VS 4.750 Swinging-Bucket Rotor, 1-27

1.8 VS 4.750-Hex Swinging-Bucket Rotor, 1-34

1.9 VS 4.750-96 Swinging-Bucket Rotor, 1-38

1.10 VS 2.5-96 Swinging-Bucket Rotor, 1-42

2.1 Examples of knob for lid assembly of fixed-angle rotors designated as bio-safe compliant., 2-2

2.2 Rotor Serial Number Format and Location, 2-3

2.3 Example of Bottle and Adapter, 2-4

2.4 Multi-well Plate Carriers for Allegra V-15R Rotors, 2-5

2.5 Tie-down Screw and T-handle rotor wrench, 2-8

2.6 Securing Fixed-Angle Rotor to Drive Shaft with Tie-down Screw., 2-9

2.7 Tie-down Screw and T-handle rotor wrench, 2-10

2.8 Securing Swinging-Bucket Rotor Yoke to Drive Shaft with Tie-down Screw, 2-11

2.9 Bucket pivotal axis at rest and at speed, 2-12

2.10 Examples of Correctly and Incorrectly Loaded Buckets, 2-13

2.11 Location of O-ring, 2-14

2.12 Securing cover on bucket with latches, 2-14

2.13 Examples of Correctly and Incorrectly Loaded Multi-well Plates, 2-16

2.14 Examples of carriage with plates, 2-16

2.15 Securing cover on carrier with latches, 2-17

3.1 Rotor body areas to check for corrosion, 3-2

3.2 Lid and O-Ring to clean, 3-4

3.3 Lubricating Pivot Pin/Bucket Contact Areas, 3-5

A.1 Example of loading different tube sizes correctly and incorrectly in a swinging-bucket rotor, A-1

A.2 Example of loading with some empty tube locations correctly,

and incorrectly, in a fixed-angle rotor and a swinging-bucket rotor., A-2

Tables

1.1 Beckman Coulter Adapters for the VF 48.2 Rotor, 1-4

1.2 Commercially Available Tubes for the VF 48.2 Rotor, 1-4

1.3 Beckman Coulter Replacement Parts for the VF 48.2 Rotor, 1-5

1.4 Beckman Coulter Tubes and Bottles for the VFC 8.50 Rotor, 1-8

1.5 Beckman Coulter Adapters for the VFC 8.50 Rotor, 1-9

1.6 Beckman Coulter Replacement Parts for the VFC 8.50 Rotor, 1-9

1.7 Beckman Coulter Bottles and Tubes for the VF 6.94 Rotor, 1-12

1.8 Beckman Coulter Adapters for the VF 6.94 Rotor, 1-13

1.9 Beckman Coulter Replacement Parts for the VF 6.94 Rotor, 1-13

1.10 Commercially Available Tubes for the VFC 24.15 Rotor, 1-16

1.11 Beckman Coulter Replacement Parts for the VFC 24.15 Rotor, 1-16

1.12 Beckman Coulter Adapters for the VF 100.2 Rotor, 1-19

1.13 Commercially Available Tubes for the VF 100.2 Rotor, 1-20

1.14 Beckman Coulter Replacement Parts for the VF 100.2 Rotor, 1-20

1.15 Beckman Coulter Bottles and Tubes for the VF 6.250 Rotor, 1-23

1.16 Beckman Coulter Adapters for the VF 6.250 Rotor, 1-24

1.17 Beckman Coulter Replacement Parts for the VF 6.250 Rotor, 1-25

1.18 Beckman Coulter Bottles and Tubes for the VS 4.750 Rotor, 1-28

1.19 Beckman Coulter Adapters for the VS 4.750 Rotor, 1-29

1.20 Beckman Coulter Replacement Parts for the VS 4.750 Rotor, 1-32

1.21 Beckman Coulter Adapters for the VS 4.750-Hex Rotor, 1-35

1.22 Beckman Coulter Replacement Parts for the VS 4.750-Hex Rotor, 1-36

1.23 Beckman Coulter Labware for Use with Multi-well Plate Carriers, 1-39

1.24 Beckman Coulter Replacement Parts for the VS 4.750-96 Rotor, 1-40

1.25 Beckman Coulter Labware for Use with Multi-well Plate Carriers, 1-43

1.26 Beckman Coulter Replacement Parts for the VS 2.5-96 Rotor, 1-43

3.1 Adapters not made of polypropylene, 3-7

Introduction

Manual Overview

The following Chapters and Appendices can be found in this manual:

CHAPTER 1, Allegra V-15R Rotor Specifications — Provides specifications for all of the rotors available to the Allegra V-15R centrifuge. Included with each rotor specification are listings (which include specifications) of the tubes, bottles, and adapters that can be used with the rotor. Replacement parts for each rotor are also included in this Chapter.

CHAPTER 2, Rotor Preparation and Operation — Provides more common information about the Allegra V-15R rotors such as bio-safety, accessories, fixed-angled and swinging bucket rotor preparation, run preparation, run speeds, and operation within the Allegra V-15R centrifuge.

CHAPTER 3, Allegra V-15R Rotor Maintenance — Provides information on the care and maintenance of Allegra V-15R rotors that includes decontamination, sterilization, and disinfection procedures. Also included in this chapter is information on troubleshooting, returning a rotor, and rotor supplies that can be ordered.

APPENDIX A, Additional Run Configurations — Provides example images for correct and incorrect rotor loading configurations with different tube sizes, and correct and incorrect loading configurations with some empty tube locations.

Glossary — Provides an alphabetical list of specialized words and terms used in this manual that are primarily used with centrifugation, or that are specific to Allegra V-15R rotors.

Beckman Coulter, Inc. Allegra V-15R Rotors Warranty — States the written guarantee by Beckman Coulter for Allegra V-15R rotors, and the conditions that must be met for warranty replacement or repair.

CHAPTER 1

Allegra V-15R Rotor Specifications

Allegra V-15R Rotors Specifications Overview

The Allegra V-15R centrifuge has a rotor library comprised of six fixed-angle rotors, and four swinging-bucket rotor configurations. Specifications and a brief technical description of each are given in this section. The rotors with their specifications that are available for the Allegra V-15R centrifuge are as follows:

- VF 48.2 Fixed-Angle Rotor Specifications
- VFC 8.50 Fixed-Angle Rotor Specifications
- VF 6.94 Fixed-Angle Rotor Specifications
- VFC 24.15 Fixed-Angle Rotor Specifications
- VF 100.2 Fixed-Angle Rotor Specifications
- VF 6.250 Fixed-Angle Rotor Specifications
- VS 4.750 Swinging-Bucket Rotor Specifications
- VS 4.750-Hex Swinging-Bucket Rotor Specifications
- VS 4.750-96 Swinging-Bucket Rotor Specifications
- VS 2.5-96 Swinging-Bucket Rotor Specifications

VF 48.2 Fixed-Angle Rotor Specifications

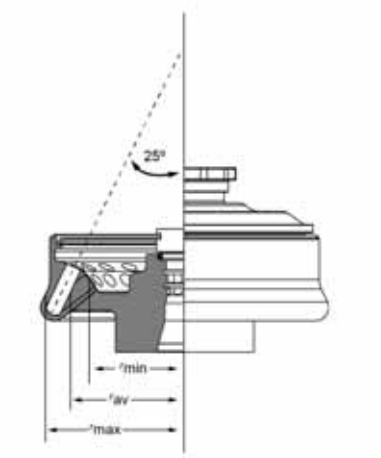

1. Axis of Rotation Outer Row

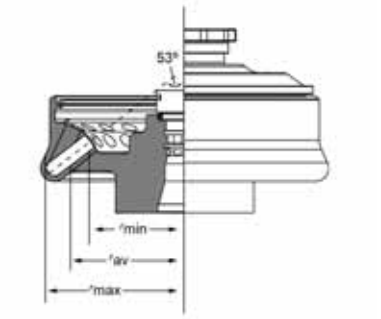

1. Axis of Rotation Inner Row

Maximum speed	13,500 RPM
Maximum Speed for 4°C Operation	13,000 RPM
Density rating at maximum speed	1.2 g/mL
Critical speed range[a]	500 to 1000 RPM
Relative Centrifugal Force[b] at maximum speed	
For 25-degree angle (outer row):	
at r_{max} (100 mm)	20,412 × *g*
at r_{av} (87 mm)	17,758 × *g*
at *min* (74 mm)	15,105 × *g*
For 53-degree angle (inner row):	
at r_{max} (100 mm)	20,412 × *g*
at r_{av} (82.5 mm)	16,840 × *g*
at r_{min} (65 mm)	13,268 × *g*
k factor at maximum speed for outer row	418
k factor at maximum speed for inner row	598
Conditions requiring speed reductions	see *Run Speeds*
Number of tube cavities	48
Nominal tube dimensions	11 × 42 mm
Nominal tube capacity	2 mL
Nominal rotor capacity	96 mL
Maximum allowable rotor imbalance	5 grams
Approximate acceleration time to maximum speed (fully loaded)	35 seconds
Approximate deceleration time from maximum speed (fully loaded)	50 seconds
Maximum cycle count or recommended retirement (whichever comes first)	50,000 cycles or 10 years
Weight of fully loaded rotor	3.0 kg (6.6 lb)
Rotor and lid material	anodized aluminum

a. The critical speed range is the range of speeds over which the rotor shifts so as to rotate about its center of mass. Passing through or running at the critical speed range is characterized by some vibration.

b. Relative Centrifugal Force (RCF) is the ratio of the centrifugal acceleration at a specified radius and speed ($r\omega^2$) to the standard acceleration of gravity (*g*) according to the following formula: RCF = $r\omega^2/g$ — where *r* is the radius in millimeters, ω is the angular velocity in radians per second (2π RPM /60), and *g* is the standard acceleration of gravity (9807 mm/s^2). After substitution: RCF = 1.12*r* (RPM/1000)^2

Additional Details:

- VF 48.2 Rotor Description
- VF 48.2 Adapters
- VF 48.2 Replacement Parts

VF 48.2 Rotor Description

The Beckman Coulter VF 48.2 fixed-angle rotor is manufactured in an ISO 9001 facility for use with the Beckman Coulter Allegra V-15R centrifuge. This rotor is intended for indoor use only.

Figure 1.1 VF 48.2 Fixed-Angle Rotor



The VF 48.2 is a fixed-angle rotor designed to centrifuge up to twenty-four 2 mL tubes at an outer angle of 25°, and twenty-four 2 mL tubes at an inner angle of 53° to the axis of rotation. This rotor develops centrifugal forces that can efficiently pellet subcellular organelles, viruses, bacteria, mitochondria, chloroplasts, or algae. Up to 96 mL of sample volume can be centrifuged per run.

The lid knob is used to secure the lid to the rotor body. The rotor and lid are made of aluminum and are anodized for corrosion resistance. The rotor and the lid are black. An O-ring in the rotor maintains atmospheric pressure in the rotor during centrifugation.

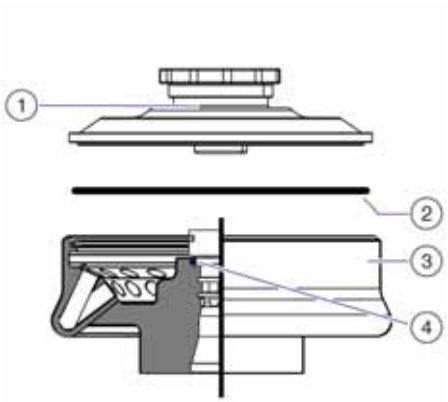

1. Lid Assembly
2. Lid O-ring
3. Rotor Body
4. Small O-ring

The VF 48.2 rotor assembly was tested (see CHAPTER 2, *Bio-Safety*) to demonstrate containment of microbiological aerosols under normal operating conditions for the associated Beckman Coulter centrifuge, and proven to be bio-safe *when used and maintained as instructed.*

Refer to the *Beckman Coulter, Inc. Allegra V-15R Rotors Warranty* at the back of this manual for warranty information.

VF 48.2 Adapters

Table 1.1 lists adapters and the specifications for each that can be used with the VF 48.2 rotor.

Table 1.1 Beckman Coulter Adapters for the VF 48.2 Rotor

PN	Description	Package Quantity	Volume	Dimensions		Performance		
			Nominal	Diameter	Length	Speed	Rmax	RCF
C63416 [a]	Adapter for 500 µL Tubes	12	0.5 mL [b]	7.9 mm	28 mm	13,500	98 mm	20,004 [c]
C63414 [a]	Adapter for 200 µL Tubes	12	0.2 mL [b]	5.85 mm	20 mm	13,500	96 mm	19,596 [c]
C63415 [a]	Adapter for 400 µL Tubes	12	0.4 mL [b]	5.8 mm	47 mm	13,500	98 mm	20,004 [c]

a. This adapter is made of nylon and is not chemically resistant to hydrogen peroxide. Other solutions should be used for cold sterilization. Consult Chemical Resistances (publication IN-175).
b. Observe manufacturer's recommendations for maximum fill volume.
c. Observe manufacturer's recommendations for RCF limits. The corresponding RPM can be calculated using the equations in the Glossary.

Additional Details:

- CHAPTER 2, Bottle Adapters
- CHAPTER 2, Using Tubes, Bottles, and Buckets

VF 48.2 Tubes

Table 1.2 lists tubes and the specifications for each tube that can be used with the VF 48.2 rotor.

Table 1.2 Commercially Available Tubes for the VF 48.2 Rotor

Description	Package Quantity	Volume		Dimensions		Required Adapter	Performance		
		Nominal	Fill	Diameter	Length		Speed	Rmax	RCF
1.5 to 2 mL Tubes[a]	N/A	1.5 to 2.0 mL	Note [b]	10.7 mm	42 mm	N/A	13,500	100 mm	20,412 [c]

a. Commercially available.
b. Observe manufacturer's recommendations for maximum fill volume.
c. Observe manufacturer's recommendations for RCF limits. The corresponding RPM can be calculated using the equations in the Glossary.

Additional Details:

- CHAPTER 2, Tubes and Bottles

VF 48.2 Replacement Parts

Table 1.3 lists the replacement parts currently available for the VF 48.2 rotor.

Table 1.3 Beckman Coulter Replacement Parts for the VF 48.2 Rotor

Description	Part Number
VF 48.2 Fixed-Angle Rotor Assembly	C63136
VF 48.2 Rotor Lid Assembly	C63146
Large O-Ring (for lid)	A57892
Small O-Ring	C63179

VFC 8.50 Fixed-Angle Rotor Specifications

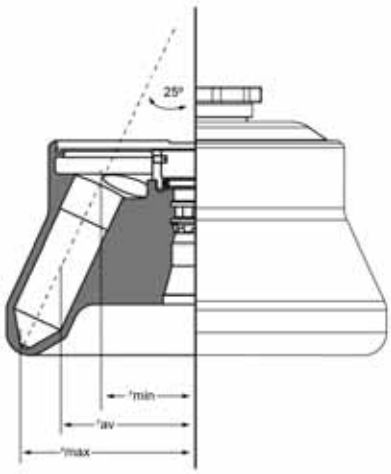

1. Axis of Rotation

Maximum speed	11,360 RPM
Maximum Speed for 4°C Operation	11,360 RPM
Density rating at maximum speed	1.2 g/mL
Critical speed range[a]	300 to 800 RPM
Relative Centrifugal Force[b] at maximum speed	
at r_{max} (104 mm)	15,032 × *g*
at r_{av} (73.5 mm)	10,623 × *g*
at r_{min} (43 mm)	6,215 × *g*
k factor at maximum speed	1,731
Conditions requiring speed reductions	see *Run Speeds*
Number of tube cavities	8
Nominal tube dimensions	29 × 117 mm
Nominal tube capacity	50 mL
Nominal rotor capacity	400 mL
Maximum allowable rotor imbalance	5 grams
Approximate acceleration time to maximum speed (fully loaded)	35 seconds
Approximate deceleration time from maximum speed (fully loaded)	65 seconds
Maximum cycle count or recommended retirement (whichever comes first)	50,000 cycles or 10 years
Weight of fully loaded rotor	6.3 kg (13.9 lb)
Rotor and lid material	anodized aluminum

a. The critical speed range is the range of speeds over which the rotor shifts so as to rotate about its center of mass. Passing through or running at the critical speed range is characterized by some vibration.

b. Relative Centrifugal Force (RCF) is the ratio of the centrifugal acceleration at a specified radius and speed ($r\omega^2$) to the standard acceleration of gravity (g) according to the following formula: RCF = $r\omega^2/g$ — where r is the radius in millimeters, ω is the angular velocity in radians per second (2π RPM /60), and g is the standard acceleration of gravity (9807 mm/s^2). After substitution: RCF = $1.12r$ (RPM/1000)^2

Additional Details:

- VFC 8.50 Rotor Description
- VFC 8.50 Tubes, Bottles and Adapters
- VFC 8.50 Replacement Parts

VFC 8.50 Rotor Description

The Beckman Coulter VFC 8.50 fixed-angle rotor is manufactured in an ISO 9001 facility for use with the Beckman Coulter Allegra V-15R centrifuge. This rotor is intended for indoor use only.

Figure 1.2 VFC 8.50 Fixed-Angle Rotor



The VFC 8.50 is a fixed-angle rotor designed to centrifuge up to eight 50 mL conical tubes at a 25° angle to the axis of rotation. Applications for this rotor include general pelleting of cells, bacteria, and food products; separating of proteins, viruses, and subcellular fractions; phase separation; and binding studies. The conical tip of the tube concentrates the pellet in the narrow end of the tube; the narrow bottom also reduces the tube's nominal volume and minimizes the amount of gradient material needed when pelleting through a dense cushion. Up to 400 mL of sample volume can be centrifuged per run.

The lid knob is used to secure the lid to the rotor body. The rotor and lid are made of aluminum and are anodized for corrosion resistance. The rotor and the lid are black. An O-ring in the rotor maintains atmospheric pressure in the rotor during centrifugation.

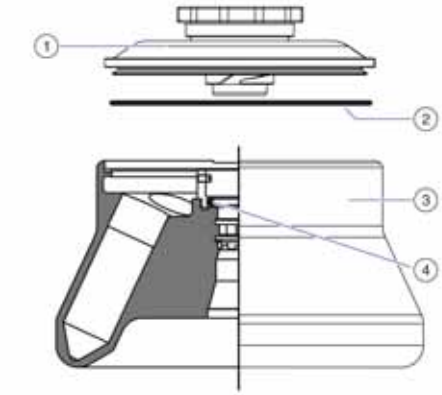

1. Lid Assembly
2. Lid O-ring
3. Rotor Body
4. Small O-ring

The rotor assembly was tested (see CHAPTER 2, *Bio-Safety*) to demonstrate containment of microbiological aerosols under normal operating conditions of the associated Beckman Coulter centrifuge, and proven to be bio-safe *when used and maintained as instructed.*

Refer to the *Beckman Coulter, Inc. Allegra V-15R Rotors Warranty* at the back of this manual for warranty information.

VFC 8.50 Tubes, Bottles and Adapters

Table 1.4 lists tubes and bottles that can be used with the VFC 8.50 rotor along with their specifications. Table 1.5 lists adapters that can be used with the VFC 8.50 rotor along with their specifications.

Table 1.4 Beckman Coulter Tubes and Bottles for the VFC 8.50 Rotor

PN	Description	Package Quantity	Volume		Dimensions		Required Adapter	Performance	
			Nominal	Fill	Diameter	Length		Speed	RCF
Note [a]	50 mL Conical Tubes	N/A	50.0 mL	Note [b]	29.5 mm	117.0 mm	N/A	11,360	15,032
361693	Polycarbonate Bottle with Cap Assembly	24	50.0 mL	40.0 mL	29.0 mm	104.0 mm	C63371	11,360	13,586
361694	Polypropylene Bottle with Cap Assembly	24	50.0 mL	40.0 mL	29.0 mm	104.0 mm	C63371	11,360	13,586
357002	Polycarbonate Bottle with Screw Cap	25	50.0 mL	38.5 mL	29.0 mm	104.0 mm	C63371	11,360	13,586
357003	Polypropylene Bottle with Screw Cap	25	50.0 mL	38.5 mL	29.0 mm	104.0 mm	C63371	11,360	13,586
363647	Polycarbonate Open-top Tube	25	50.0 mL	36.5 mL	29.0 mm	104.0 mm	C63371	11,360	13,586
357007	Polypropylene Open-top Tube	25	50.0 mL	36.5 mL	29.0 mm	104.0 mm	C63371	11,360	13,586
363664	Polycarbonate Tube with Snap-on Cap	25	50.0 mL	36.5 mL	29.0 mm	104.0 mm	C63371	11,360	13,586
357005	Polypropylene Tubes with Snap-on Cap	25	50.0 mL	36.5 mL	29.0 mm	104.0 mm	C63371	11,360	13,586

a. Commercially available.
b. Observe manufacturer's recommendations for maximum fill volume.

Additional Details:

- CHAPTER 2, Tubes and Bottles

Table 1.5 Beckman Coulter Adapters for the VFC 8.50 Rotor

PN	Description	Package Quantity	Volume	Dimensions		Performance		
			Nominal	Diameter	Length	Speed	Rmax	RCF
C63371 [a]	Adapter for 50 mL Tubes	2	50 mL [b]	29 mm	104 mm	11,360	94 mm	13,586 [c]
C63369	Adapter for 25 to 30 mL Skirted Tubes	2	30 mL [b]	25 mm	107 mm	11,360	81 mm	11,707 [c]
		2	25 mL [b]	25 mm	90 mm	11,360	81 mm	11,707 [c]
C63417	Adapter for 15 mL Conical Tubes	2	15 mL [b]	16.5 mm	120 mm	11,360	103 mm	14,887 [c]

a. This adapter is made of nylon and is not chemically resistant to hydrogen peroxide. Other solutions should be used for cold sterilization. Consult Chemical Resistances (publication IN-175).

b. Observe manufacturer's recommendations for maximum fill volume.

c. Observe manufacturer's recommendations for RCF limits. The corresponding RPM can be calculated using the equations in the Glossary.

Additional Details:

- CHAPTER 2, Bottle Adapters
- CHAPTER 2, Using Tubes, Bottles, and Buckets

VFC 8.50 Replacement Parts

Table 1.6 lists the replacement parts currently available for the VFC 8.50 rotor.

Table 1.6 Beckman Coulter Replacement Parts for the VFC 8.50 Rotor

Description	Part Number
VFC 8.50 Fixed-Angle Rotor Assembly	C63139
VFC 8.50 Rotor Lid Assembly	C63149
Large O-Ring (for lid)	C69755
Small O-Ring	C63179

VF 6.94 Fixed-Angle Rotor Specifications

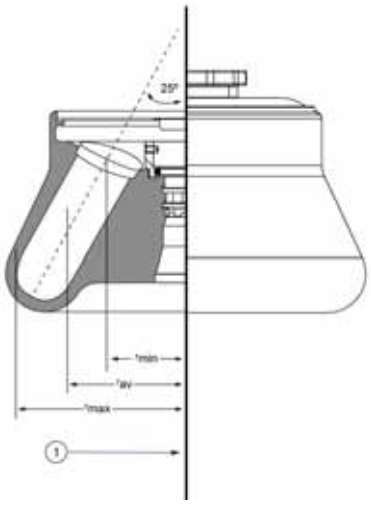

1. Axis of Rotation

Maximum speed	10,000 RPM
Maximum Speed for 4°C Operation	10,000 RPM
Density rating at maximum speed	1.2 g/mL
Critical speed range[a]	400 to 800 RPM
Relative Centrifugal Force[b] at maximum speed	
at r_{max} (106 mm)	11,872 × *g*
at r_{av} (70.5 mm)	7,896 × *g*
at r_{min} (35 mm)	3,920 × *g*
k factor at maximum speed	2,803
Conditions requiring speed reductions	see *Run Speeds*
Number of tube cavities	6
Nominal tube dimensions	38 × 110 mm
Nominal tube capacity	94 mL
Nominal rotor capacity	564 mL
Maximum allowable rotor imbalance	5 grams
Approximate acceleration time to maximum speed (fully loaded)	45 seconds
Approximate deceleration time from maximum speed (fully loaded)	65 seconds
Maximum cycle count or recommended retirement (whichever comes first)	50,000 cycles or 10 years
Weight of fully loaded rotor	7.8 kg (17.2 lb)
Rotor and lid material	anodized aluminum

a. The critical speed range is the range of speeds over which the rotor shifts so as to rotate about its center of mass. Passing through or running at the critical speed range is characterized by some vibration.

b. Relative Centrifugal Force (RCF) is the ratio of the centrifugal acceleration at a specified radius and speed ($r\omega^2$) to the standard acceleration of gravity (g) according to the following formula: RCF = $r\omega^2/g$ — where r is the radius in millimeters, ω is the angular velocity in radians per second (2π RPM /60), and g is the standard acceleration of gravity (9807 mm/s^2). After substitution: RCF = $1.12r$ (RPM/1000)^2

Additional Details:

- VF 6.94 Rotor Description
- VF 6.94 Bottles, Tubes and Adapters
- VF 6.94 Replacement Parts

VF 6.94 Rotor Description

The Beckman Coulter VF 6.94 fixed-angle rotor is manufactured in an ISO 9001 facility for use with the Beckman Coulter Allegra V-15R centrifuge. This rotor is intended for indoor use only.

Figure 1.3 VF 6.94 Fixed-Angle Rotor



The VF 6.94 is a fixed-angle rotor designed to centrifuge up to six 94 mL tubes at a 25° angle to the axis of rotation. Applications for this rotor include density gradient separations of erythrocytes, cell lysate fractions, granules, as well as differential separation of DNA, proteins, and viruses. Up to 564 mL of sample volume can be centrifuged per run.

The lid knob is used to secure the lid to the rotor body. The rotor and lid are made of aluminum and are anodized for corrosion resistance. The rotor and the lid are black. An O-ring in the rotor maintains atmospheric pressure in the rotor during centrifugation.

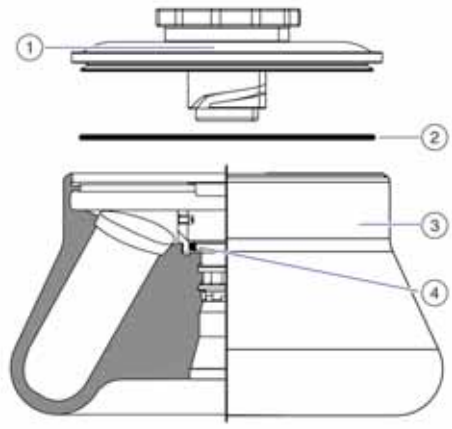

1. Lid Assembly
2. Lid O-ring
3. Rotor Body
4. Small O-ring

The rotor assembly was tested (see CHAPTER 2, *Bio-Safety*) to demonstrate containment of microbiological aerosols under normal operating conditions of the associated Beckman Coulter centrifuge, and proven to be bio-safe *when used and maintained as instructed.*

Refer to the *Beckman Coulter, Inc. Allegra V-15R Rotors Warranty* at the back of this manual for warranty information.

VF 6.94 Bottles, Tubes and Adapters

Table 1.7 lists bottles and tubes that can be used with the VF 6.94 rotor along with their specifications. Table 1.8 lists adapters that can be used with the VF 6.94 rotor along with their specifications.

Table 1.7 Beckman Coulter Bottles and Tubes for the VF 6.94 Rotor

PN	Description	Package Quantity	Volume		Dimensions		Required Adapter	Performance	
			Nominal	Fill	Diameter	Length		Speed	RCF
355643	Polypropylene Thick-wall Tube	25	94.0 mL	50.7 mL	38.0 mm	102.0 mm	N/A	10,000	11,872
363081	Polycarbonate Bottle with Cap Assembly	6	85.0 mL	74.5 mL	38.0 mm	104.0 mm	N/A	10,000	11,872
363082	Polypropylene Bottle with Screw Cap	6	80.0 mL	67.4 mL	38.0 mm	104.0 mm	N/A	10,000	11,872
357002	Polycarbonate Bottle with Screw Cap	25	50.0 mL	38.5 mL	29.0 mm	104.0 mm	392830	10,000	11,536
357003	Polypropylene Bottle with Screw Cap	25	50.0 mL	38.5 mL	29.0 mm	104.0 mm	392830	10,000	11,536
363075	Polycarbonate Tube, Graduated	8	50.0 mL	38.5 mL	29.0 mm	104.0 mm	392830	10,000	11,536
363647	Polycarbonate Open-top Tube	25	50.0 mL	36.5 mL	29.0 mm	104.0 mm	392830	10,000	11,536
357007	Polypropylene Open-top Tube	25	50.0 mL	36.5 mL	29.0 mm	104.0 mm	392830	10,000	11,536
340196	Polyethylene Tube with Snap-On Cap	500	1.8 mL	1.4 mL	11.0 mm	45.0 mm	344497 in 392830	10,000	Top: 8,669 Bottom: 10,763
357448	Polypropylene Tube with Snap-On Cap	500	1.5 mL	1.4 mL	11.0 mm	38.0 mm	344497 in 392830	10,000	Top: 8,669 Bottom: 10,763
343169	Polypropylene Tube with Seperate Cap	500	1.5 mL	1.4 mL	11.0 mm	40.0 mm	344497 in 392830	10,000	Top: 8,669 Bottom: 10,763

Table 1.8 Beckman Coulter Adapters for the VF 6.94 Rotor

PN	Description	Package Quantity	Volume	Dimensions		Performance		
			Nominal	Diameter	Length	Speed	Rmax	RCF
C63412	Adapter for 50 mL Conical Tubes	2	50.0 mL [a]	29.5 mm	117 mm	10,000	106 mm	11,872 [b]
392830	Adapter for 50 mL Tubes	6	50.0 mL [a]	29 mm	104 mm	10,000	103 mm	11,536 [b]
C63410	Adapter for 30 mL Tubes [c]	2	30.0 mL [a]	25.3 mm	98 mm	10,000	89 mm	9,968 [b]
C63411	Adapter for 30 mL Tubes [c]	2	30.0 mL [a]	23.6 mm	106 mm	10,000	99 mm	11,088 [b]
C63408	Adapter for 15 mL Tubes	2	15.0 mL [a]	17.5 mm	106 mm	10,000	98 mm	10,976 [b]
C63409	Adapter for 15 mL Conical Tubes	2	15.0 mL [a]	16.5 mm	120 mm	10,000	105 mm	11,760 [b]
C63407	Adapter for 10 mL Tubes	2	10.0 mL [a]	16.1 mm	81.1 mm	10,000	77 mm	8,624 [b]
344497 in 392830	Adapter for 1.5 mL Microfuge tubes 6 tubes per adapter	6	1.5 mL [a]	11 mm	40 mm	10,000	77.4 mm 96.1 mm	8,669 [b] 10,763 [b]

a. Observe manufacturer's recommendations for maximum fill volume.

b. Observe manufacturer's recommendations for RCF limits. The corresponding RPM can be calculated using the equations in the Glossary.

c. The adapter is made of Nitrile Butadiene Rubber.

Additional Details:

- CHAPTER 2, Bottle Adapters
- CHAPTER 2, Using Tubes, Bottles, and Buckets

VF 6.94 Replacement Parts

Table 1.9 lists the replacement parts currently available for the VF 6.94 rotor.

Table 1.9 Beckman Coulter Replacement Parts for the VF 6.94 Rotor

Description	Part Number
VF 6.94 Fixed-Angle Rotor Assembly	C63140
VF 6.94 Rotor Lid Assembly	C63150
Large O-Ring (for lid)	C69755
Small O-Ring (for rotor body near the hub)	C63179

VFC 24.15 Fixed-Angle Rotor Specifications

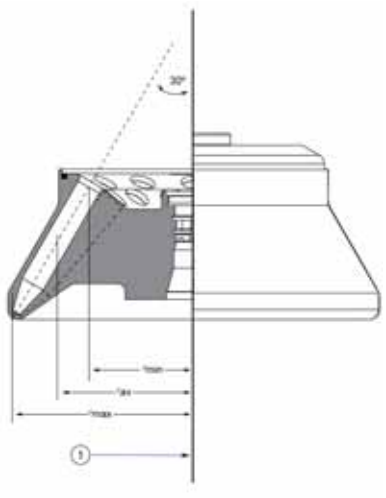

1. Axis of Rotation Outer Row

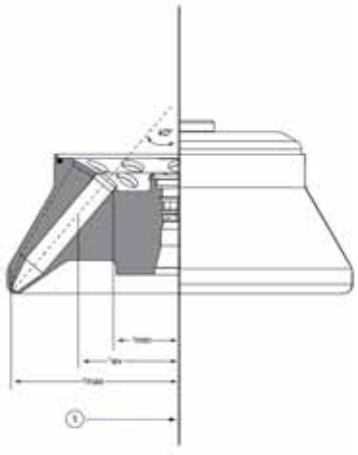

1. Axis of Rotation Inner Row

Maximum speed	9,000 RPM
Maximum Speed for 4°C Operation	9,000 RPM
Density rating at maximum speed	1.2 g/mL
Critical speed range[a]	300 to 700 RPM
Relative Centrifugal Force[b] at maximum speed	
For 30-degree angle (outer row):	
at r_{max} (126 mm)	11,431 × *g*
at r_{av} (94.5 mm)	8,573 × *g*
at r_{min} (63 mm)	5,715 × *g*
For 40-degree angle (inner row):	
at r_{max} (126 mm)	11,431 × *g*
at r_{av} (87.5 mm)	7,938 × *g*
at r_{min} (49 mm)	4,445 × *g*
k factor at maximum speed for outer row	2,165
k factor at maximum speed for inner row	2,950
Conditions requiring speed reductions	see *Run Speeds*
Number of tube cavities	24
Nominal tube dimensions	17 × 120 mm
Nominal tube capacity	15 mL
Nominal rotor capacity	360 mL
Maximum allowable rotor imbalance	5 grams
Approximate acceleration time to maximum speed (fully loaded)	50 seconds
Approximate deceleration time from maximum speed (fully loaded)	75 seconds
Maximum cycle count or recommended retirement (whichever comes first)	50,000 cycles or 10 years
Weight of fully loaded rotor	7.7 kg (17.0 lb)
Rotor and lid material	anodized aluminum

a. The critical speed range is the range of speeds over which the rotor shifts so as to rotate about its center of mass. Passing through or running at the critical speed range is characterized by some vibration.

b. Relative Centrifugal Force (RCF) is the ratio of the centrifugal acceleration at a specified radius and speed ($r\omega^2$) to the standard acceleration of gravity (g) according to the following formula: RCF = $r\omega^2/g$ — where r is the radius in millimeters, ω is the angular velocity in radians per second (2π RPM /60), and g is the standard acceleration of gravity (9807 mm/s^2). After substitution: RCF = $1.12r$ (RPM/1000)^2

Additional Details:

- VFC 24.15 Rotor Description
- VFC 24.15 Tubes
- VFC 24.15 Replacement Parts

VFC 24.15 Rotor Description

The Beckman Coulter VFC 24.15 fixed-angle rotor is manufactured in an ISO 9001 facility for use with the Beckman Coulter Allegra V-15R centrifuge. This rotor is intended for indoor use only.

Figure 1.4 VFC 24.15 Fixed-Angle Rotor



The VFC 24.15 is a fixed-angle rotor designed to centrifuge up to twenty-four 15 mL tubes at an angle of 30° (outer row) and 40° (inner row) angle to the axis of rotation. Applications for this rotor include density gradient separations of erythrocytes, cell lysate fractions, granules, as well as differential separation of DNA, proteins, and viruses. Up to 360 mL of sample volume can be centrifuged per run.

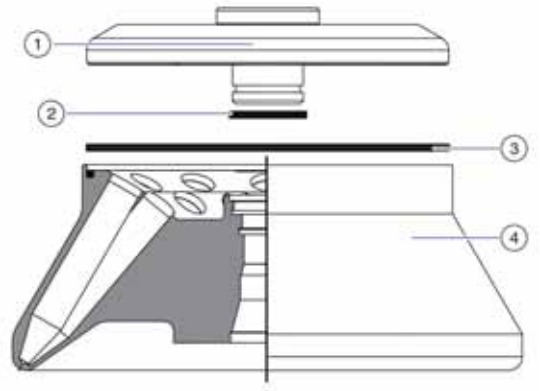

1. Lid Assembly
2. Small O-ring on stem of lid
3. Large O-ring on rotor body
4. Rotor Body

The lid knob is used to secure the lid to the rotor body. The rotor and lid are made of aluminum and are anodized for corrosion resistance. The rotor and the lid are black. An O-ring in the rotor maintains atmospheric pressure in the rotor during centrifugation.

Refer to the *Beckman Coulter, Inc. Allegra V-15R Rotors Warranty* at the back of this manual for warranty information.

VFC 24.15 Tubes

Table 1.10 lists tubes and the specifications for each tube that can be used with the VFC 24.15 rotor.

Table 1.10 Commercially Available Tubes for the VFC 24.15 Rotor

Description	Package Quantity	Volume		Dimensions		Required Adapter	Performance	
		Nominal	Fill	Diameter	Length		Speed	RCF
15 mL Conical Tubes[a]	N/A	15 mL	Note [b]	16.5 mm	120 mm	N/A	9,000	11,431 [c]

a. Commercially available.
b. Observe manufacturer's recommendations for maximum fill volume.
c. Observe manufacturer's recommendations for RCF limits. The corresponding RPM can be calculated using the equations in the Glossary.

Additional Details:

- CHAPTER 2, Tubes and Bottles

VFC 24.15 Replacement Parts

Table 1.11 lists the replacement parts currently available for the VFC 24.15 rotor.

Table 1.11 Beckman Coulter Replacement Parts for the VFC 24.15 Rotor

Description	Part Number
VFC 24.15 Fixed-Angle Rotor Assembly	C63138
VFC 24.15 Rotor Lid Assembly	C63148
Large O-Ring (for rotor body)	A57892
Small O-Ring (for lid)	368300

VF 100.2 Fixed-Angle Rotor Specifications

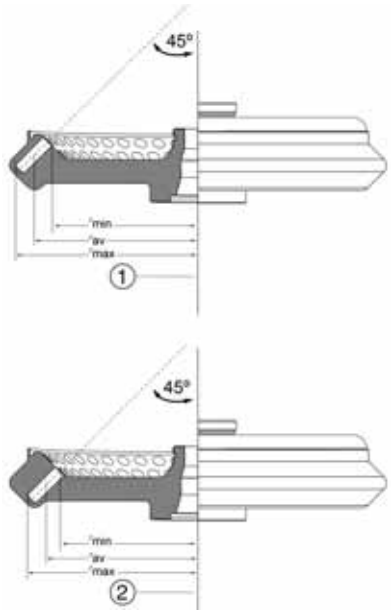

1. Axis of Rotation Outer Row
2. Axis of Rotation Inner Row

Maximum speed	6,500 RPM
Maximum Speed for 4°C Operation	6,500 RPM
Density rating at maximum speed	1.2 g/mL
Critical speed range[a]	300 to 800 RPM
Relative Centrifugal Force[b] at maximum speed	
For 45-degree angle (outer row):	
at r_{max} (163 mm)	7,713 × *g*
at r_{av} (147 mm)	6,956 × *g*
at r_{min} (131 mm)	6,199 × *g*
For 45-degree angle (inner row):	
at r_{max} (151 mm)	7,145 × *g*
at r_{av} (135 mm)	6,388 × *g*
at r_{min} (119 mm)	5,631 × *g*
k factor at maximum speed for outer row	1,309
k factor at maximum speed for inner row	1,426
Conditions requiring speed reductions	see *Run Speeds*
Number of tube cavities	100
Nominal tube dimensions	11 × 42 mm
Nominal tube capacity	2 mL
Nominal rotor capacity	200 mL
Maximum allowable rotor imbalance	5 grams
Approximate acceleration time to maximum speed (fully loaded)	55 seconds
Approximate deceleration time from maximum speed (fully loaded)	65 seconds
Maximum cycle count or recommended retirement (whichever comes first)	50,000 cycles or 10 years
Weight of fully loaded rotor	7.3 kg (16.1 lb)
Rotor and lid material	anodized aluminum

a. The critical speed range is the range of speeds over which the rotor shifts so as to rotate about its center of mass. Passing through or running at the critical speed range is characterized by some vibration.

b. Relative Centrifugal Force (RCF) is the ratio of the centrifugal acceleration at a specified radius and speed ($r\omega^2$) to the standard acceleration of gravity (g) according to the following formula: RCF = $r\omega^2/g$ — where r is the radius in millimeters, ω is the angular velocity in radians per second (2π RPM /60), and g is the standard acceleration of gravity (9807 mm/s^2). After substitution: RCF = 1.12r (RPM/1000)^2

Additional Details:

- VF 100.2 Rotor Description
- VF 100.2 Adapters
- VF 100.2 Replacement Parts

VF 100.2 Rotor Description

The Beckman Coulter VF 100.2 fixed-angle rotor is manufactured in an ISO 9001 facility for use with the Beckman Coulter Allegra V-15R centrifuge. This rotor is intended for indoor use only.

Figure 1.5 VF 100.2 Fixed-Angle Rotor



The VF 100.2 is a fixed-angle rotor designed to centrifuge up to 100 1.5 to 2.2 mL reaction vials, as well as 250 to 400-µL vials and 500 to 750-µL tubes. In regards to application, this rotor also develops centrifugal forces that can efficiently pellet subcellular organelles, viruses, bacteria, mitochondria, chloroplasts, or algae.

The lid knob is used to secure the lid to the rotor body. The rotor and lid are made of aluminum and are anodized for corrosion resistance. The rotor and the lid are black. An O-ring in the rotor maintains atmospheric pressure in the rotor during centrifugation.

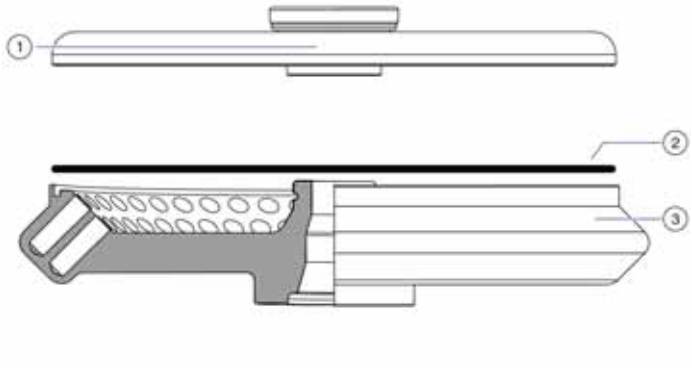

1. Lid Assembly
2. Large O-ring on rotor body
3. Rotor Body

Refer to the *Beckman Coulter, Inc. Allegra V-15R Rotors Warranty* at the back of this manual for warranty information.

VF 100.2 Adapters

Table 1.12 lists adapters and the specifications for each tube that can be used with the VF 100.2 rotor.

Table 1.12 Beckman Coulter Adapters for the VF 100.2 Rotor

PN	Description	Package Quantity	Volume	Dimensions		Performance		
			Nominal	Diameter	Length	Speed	Rmax	RCF
C63416 [a]	Adapter for 500 µL Tubes	12	0.5 mL [b]	7.9 mm	28 mm	6,500	Outer: 161 mm Inner: 135 mm	Outer: 7,619 [c] Inner: 6,388 [c]
C63415 [a]	Adapter for 400 µL Tubes	12	0.4 mL [b]	5.8 mm	47 mm	6,500	Outer: 161 mm Inner: 135 mm	Outer: 7,619 [c] Inner: 6,388 [c]
C63414 [a]	Adapter for 200 µL Tubes	12	0.2 mL [b]	5.85 mm	20 mm	6,500	Outer: 159 mm Inner: 133 mm	Inner: 7,524 [c] Inner: 6,294 [c]

a. This adapter is made of nylon and is not chemically resistant to hydrogen peroxide. Other solutions should be used for cold sterilization. Consult Chemical Resistances (publication IN-175).

b. Observe manufacturer's recommendations for maximum fill volume.

c. Observe manufacturer's recommendations for RCF limits. The corresponding RPM can be calculated using the equations in the Glossary.

Additional Details:

- CHAPTER 2, Bottle Adapters
- CHAPTER 2, Using Tubes, Bottles, and Buckets

VF 100.2 Tubes

Table 1.13 lists tubes and the specifications for each tube that can be used with the VF 100.2 rotor.

Table 1.13 Commercially Available Tubes for the VF 100.2 Rotor

Description	Package Quantity	Volume		Dimensions		Required Adapter	Performance		
		Nominal	Fill	Diameter	Length		Speed	Rmax	RCF
1.5 to 2 mL Tubes[a]	N/A	1.5 to 2.0 mL	Note [b]	10.7 mm	42 mm	N/A	6,500	Outer: 163 mm Inner: 151 mm	Outer: 7,713 [c] Inner: 7,145 [c]

a. Commercially available.
b. Observe manufacturer's recommendations for maximum fill volume.
c. Observe manufacturer's recommendations for RCF limits. The corresponding RPM can be calculated using the equations in the Glossary.

Additional Details:

- CHAPTER 2, Tubes and Bottles

VF 100.2 Replacement Parts

Table 1.14 lists the replacement parts currently available for the VF 100.2 rotor.

Table 1.14 Beckman Coulter Replacement Parts for the VF 100.2 Rotor

Description	Part Number
VF 100.2 Fixed-Angle Rotor Assembly	C63137
VF 100.2 Rotor Lid Assembly	C63147
Large O-Ring (for rotor body)	C63180
Opening Tool	C63191

VF 6.250 Fixed-Angle Rotor Specifications

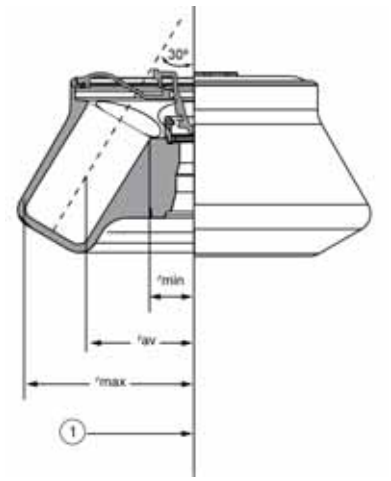

1. Axis of Rotation

Maximum speed	5,450 RPM
Maximum Speed for 4°C Operation	5,450 RPM
Density rating at maximum speed	1.2 g/mL
Critical speed range[a]	200 to 600 RPM
Relative Centrifugal Force[b] at maximum speed	
at r_{max} (145 mm)	4,824 × *g*
at r_{av} (92 mm)	3,061 × *g*
at r_{min} (39 mm)	1,297 × *g*
k factor at maximum speed	11,185
Conditions requiring speed reductions	see *Run Speeds*
Number of tube cavities	6
Nominal tube dimensions	61.5 × 120 mm
Nominal tube capacity	250 mL
Nominal rotor capacity	1,500 mL
Maximum allowable rotor imbalance	10 grams
Approximate acceleration time to maximum speed (fully loaded)	50 seconds
Approximate deceleration time from maximum speed (fully loaded)	80 seconds
Maximum cycle count or recommended retirement (whichever comes first)	50,000 cycles or 10 years
Weight of fully loaded rotor	14.9 kg (32.8 lb)
Rotor and lid material	anodized aluminum

a. The critical speed range is the range of speeds over which the rotor shifts so as to rotate about its center of mass. Passing through or running at the critical speed range is characterized by some vibration.

b. Relative Centrifugal Force (RCF) is the ratio of the centrifugal acceleration at a specified radius and speed ($r\omega^2$) to the standard acceleration of gravity (g) according to the following formula: RCF = $r\omega^2/g$ — where r is the radius in millimeters, ω is the angular velocity in radians per second (2π RPM /60), and g is the standard acceleration of gravity (9807 mm/s^2). After substitution: RCF = $1.12r$ (RPM/1000)^2

Additional Details:

- VF 6.250 Rotor Description
- VF 6.250 Bottles, Tubes and Adapters
- VF 6.250 Replacement Parts

VF 6.250 Rotor Description

The Beckman Coulter VF 6.250 fixed-angle rotor is manufactured in an ISO 9001 facility for use with the Beckman Coulter Allegra V-15R centrifuge. This rotor is intended for indoor use only.

Figure 1.6 VF 6.250 Fixed-Angle Rotor



⚠ WARNING

Risk of personal injury. Use appropriate lifting techniques when installing this rotor into or removing it from the instrument.

The VF 6.250 is a fixed-angle rotor designed to centrifuge up to six 250 mL tubes at a 30° angle to the axis of rotation. For applications, the rotor develops centrifugal forces that can efficiently pellet bacterial cells from large volumes, or particles from tissue homogenates. Short column methods (such as partially filled tubes) may also be used to purify a large quantity of virus in a step gradient. Up to 1,500 mL of sample volume can be centrifuged per run.

The lid knob is used to secure the lid to the rotor body. The rotor and lid are made of aluminum and are anodized for corrosion resistance. The rotor and the lid are black. An O-ring in the rotor maintains atmospheric pressure in the rotor during centrifugation.

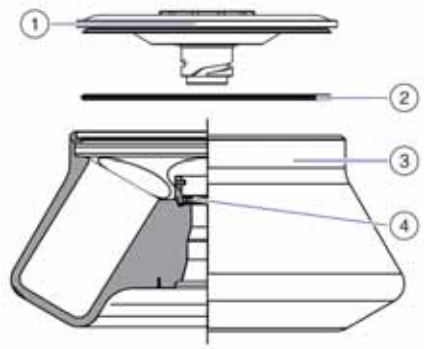

1. Lid Assembly
2. Lid O-ring
3. Rotor Body
4. Small O-ring

The rotor assembly was tested (see CHAPTER 2, *Bio-Safety*) to demonstrate containment of microbiological aerosols under normal operating conditions of the associated Beckman Coulter centrifuge, and proven to be bio-safe *when used and maintained as instructed*.

Refer to the *Beckman Coulter, Inc. Allegra V-15R Rotors Warranty* at the back of this manual for warranty information.

VF 6.250 Bottles, Tubes and Adapters

Table 1.15 lists bottles and tubes that can be used with the VF 6.250 rotor along with their specifications. Table 1.16 lists adapters that can be used with the VF 6.250 rotor along with their specifications.

Table 1.15 Beckman Coulter Bottles and Tubes for the VF 6.250 Rotor

PN	Description	Package Quantity	Volume		Dimensions		Required Adapter	Performance	
			Nominal	Fill	Diameter	Length		Speed	RCF
356011	Polypropylene Wide-Mouth Bottle with Cap Assembly	6	250.0 mL	250 mL	62.0 mm	120.0 mm	N/A	5,450	4,824
357000	Polycarbonate Bottle with Cap Assembly	6	50.0 mL	40 mL	29.0 mm	104.0 mm	C63403	5,450	4,558
357001	Polypropylene Bottle with Cap Assembly	6	50.0 mL	40 mL	29.0 mm	104.0 mm	C63403	5,450	4,558
357002	Polycarbonate Bottle with Screw Cap	25	50.0 mL	38.5 mL	29.0 mm	104.0 mm	C63403	5,450	4,558
357003	Polypropylene Bottle with Screw Cap	25	50.0 mL	38.5 mL	29.0 mm	104.0 mm	C63403	5,450	4,558
357005	Polypropylene Tubes with Snap-on Cap	25	50.0 mL	36 mL	29.0 mm	104.0 mm	C63403	5,450	4,558
357007	Polypropylene Open-top Tube	25	50.0 mL	36 mL	29.0 mm	104.0 mm	C63403	5,450	4,558
361693	Polycarbonate Bottle with Cap Assembly	24	50.0 mL	40 mL	29.0 mm	104.0 mm	C63403	5,450	4,558
361694	Polypropylene Bottle with Cap Assembly	24	50.0 mL	40 mL	29.0 mm	104.0 mm	C63403	5,450	4,558
363647	Polycarbonate Open-top Tube	25	50.0 mL	36 mL	29.0 mm	104.0 mm	C63403	5,450	4,558

Table 1.15 Beckman Coulter Bottles and Tubes for the VF 6.250 Rotor *(Continued)*

PN	Description	Package Quantity	Volume		Dimensions		Required Adapter	Performance	
			Nominal	Fill	Diameter	Length		Speed	RCF
363664	Polycarbonate Tube with Snap-on Cap	25	50.0 mL	36 mL	29.0 mm	104.0 mm	C63403	5,450	4,558
357448	Polypropylene Tube with Snap-on Cap	500	1.5 mL	1.4 mL	11.0 mm	38.0 mm	C63406	5,450	4,258

Additional Details:

- CHAPTER 2, Tubes and Bottles

Table 1.16 Beckman Coulter Adapters for the VF 6.250 Rotor

PN	Description	Package Quantity	Volume	Dimensions		Performance		
			Nominal	Diameter	Length	Speed	Rmax	RCF
C63403	Adapter for 50 mL Tubes	2	50 mL [a]	29 mm	104 mm	5450	137 mm	4,558 [b]
C63405	Adapter for 50 mL Conical Tubes	2	50 mL [a]	29 mm	117 mm	5450	141 mm	4,691 [b]
C63404	Adapter for 15 mL Conical Tubes 4 tubes per adapter	2	15 mL [a]	16.5 mm	120 mm	5450	144 mm	4,790 [b]
C63406	Adapter for Microfuge Tubes 9 tubes per adapter	2	1.50 mL [a]	10.7 mm	42 mm	5450	128 mm	4,258 [b]

a. Observe manufacturer's recommendations for maximum fill volume.
b. Observe manufacturer's recommendations for RCF limits. The corresponding RPM can be calculated using the equations in the Glossary.

Additional Details:

- CHAPTER 2, Bottle Adapters
- CHAPTER 2, Using Tubes, Bottles, and Buckets

VF 6.250 Replacement Parts

Table 1.17 lists the replacement parts currently available for the VF 6.250 rotor.

Table 1.17 Beckman Coulter Replacement Parts for the VF 6.250 Rotor

Description	Part Number
VF 6.250 Fixed-Angle Rotor Assembly	C63141
VF 6.250 Rotor Lid Assembly	C63151
Large O-Ring (for lid)	C69757
Small O-Ring	C63179

VS 4.750 Swinging-Bucket Rotor Specifications

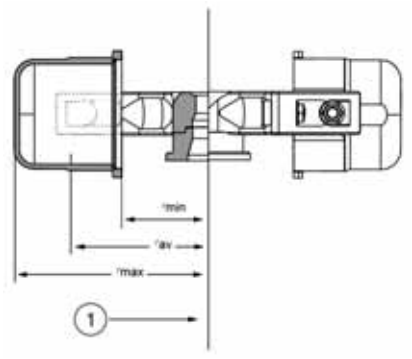

1. Axis of Rotation

Maximum Speed

200-240 VAC ..... 4,700 RPM
120 VAC ..... 4,500 RPM
Critical speed range[a] ..... 300 - 800 RPM
Maximum Speed for 4°C Operation ..... 4,700 RPM
Maximum solution density..... 1.2 g/mL

Relative Centrifugal Force[b] at maximum speed

(at r_{max} = 188 mm)
120 VAC ..... 4,264 × *g*
200-240 VAC ..... 4,651 × *g*
(at r_{av} = 129 mm)
120 VAC ..... 2,926 × *g*
200-240 VAC ..... 3,192 × *g*
(at r_{min} = 70 mm)
120 VAC ..... 1,588 × *g*
200-240 VAC ..... 1,732 × *g*

Conditions requiring speed reductions ..... see *Run Speeds*

Number of buckets/carriers 4
Maximum allowable rotor imbalance ..... 20 grams
Available tubes and bottles ..... see Table 1.18
Maximum load allowed for tube-and-bottle buckets at rated speed (excluding weight of bucket and cover) ..... 1000 grams
Maximum rotor capacity ..... 3,000 mL
Approximate acceleration time to maximum speed (fully loaded) ..... 35 seconds
Approximate deceleration time from maximum speed (fully loaded) ..... 50 seconds
Maximum cycle count or recommended retirement (whichever comes first) ..... 50,000 cycles or 10 years
Weight of fully loaded rotor (buckets with covers)..... 10.6 kg (23.4 lb)
Rotor yoke material.....anodized aluminum
Bucket material.....anodized aluminum

a. The critical speed range is the range of speeds over which the rotor shifts so as to rotate about its center of mass. Passing through or running at the critical speed range is characterized by some vibration.

b. Relative Centrifugal Force (RCF) is the ratio of the centrifugal acceleration at a specified radius and speed ($r\omega^2$) to the standard acceleration of gravity (*g*) according to the following formula: RCF = $r\omega^2/g$ — where *r* is the radius in millimeters, ω is the angular velocity in radians per second (2 π RPM /60), and *g* is the standard acceleration of gravity (9807 mm/s^2). After substitution: RCF = 1.12*r* (RPM/1000)^2

Additional Details:

- VS 4.750 Rotor Description
- VS 4.750 Bottles, Tubes and Adapters
- VS 4.750 Replacement Parts

VS 4.750 Rotor Description

The Beckman Coulter VS 4.750 swinging-bucket rotor is manufactured in an ISO 9001 facility for use with the Beckman Coulter Allegra V-15R centrifuge. This rotor is intended for indoor use only.

Figure 1.7 VS 4.750 Swinging-Bucket Rotor



1. VS 4.750 Swinging-Bucket Rotor Yoke
2. Round Bucket with Cover (bio-safe)

⚠ WARNING

Use of accessories not listed in this publication may compromise the integrity of the bio-safe seal. Not all tubes, bottles and adapters can be used in the VS 4.750 rotor with the bio-safe lid. Refer to Table 1.18 and Table 1.19 for additional information.

IMPORTANT The round bucket version of the Allegra VS 4.750 swinging-bucket rotor is certified as bio-safe when used with the bucket cover. See CHAPTER 2, *Bio-Safety*.

The VS 4.750 is a four-place swinging-bucket rotor designed to centrifuge four 750 mL tubes at a 90° angle to the axis of rotation. Up to 3,000 mL of sample volume can be centrifuged per run. The rotor buckets carry adapters that allow centrifugation of a wide range of tube and bottle sizes. The rotor develops centrifugal forces that are suitable for rapidly sedimenting protein precipitates, large particles, cells, and cell debris.

The rotor yoke is made of aluminum. Black anodized aluminum buckets can be run by placing them over pivot pins on the arms of the yoke; they swing out to horizontal position during centrifugation.

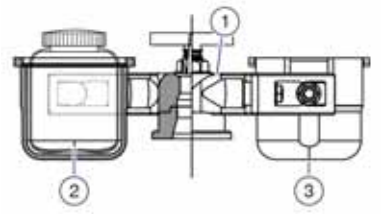

1. Yoke
2. Bottle
3. Bucket

NOTE The cover for the buckets with this rotor is optional.

Transparent covers made of a high impact plastic are available for the rotor buckets. When *maintained as instructed*, the buckets when used with covers provide containment of microbiological aerosols under normal conditions. Each cover requires an O-ring that seats on a ledge inside the bucket. The covers, which are held in place by attached latch assemblies, can be

used with some bottles and tubes listed (see bottles and tubes listed in Allegra V-15R Rotors Specifications Overview for the specific rotor), in this manual. The covers will contain liquids and broken tube particles, reducing the need to clean the centrifuge chamber and allowing the user to take appropriate precautions before opening the covers in the event of tube breakage.

Refer to the *Beckman Coulter, Inc. Allegra V-15R Rotors Warranty* at the back of this manual for warranty information.

VS 4.750 Bottles, Tubes and Adapters

Table 1.18 lists Bottles and tubes that can be used with the VS 4.750 rotor along with their specifications. Table 1.19 lists adapters that can be used with the VS 4.750 rotor along with their specifications

Table 1.18 Beckman Coulter Bottles and Tubes for the VS 4.750 Rotor

PN	Description	Package Quantity	Volume		Dimensions		Required Adapter	Performance	
			Nominal	Fill	Diameter	Length		Speed	RCF
C63392	Polypropylene Bottle with Screw Cap	2	750.00 mL	710 mL	100.00 mm	127.00 mm	NA	4,700	4,651
358299	Polycarbonate Bottle with Screw Cap	6	750.00 mL	700 mL	96 mm	130.00 mm	C63192	4,700	4,651
356855	Polypropylene Bottle with Screw Cap	6	750.00 mL	700 mL	96 mm	130.00 mm	C63192	4,700	4,651
C63162	Polypropylene Bottle with Screw Cap	6	500.00 mL	500 mL	85.00 mm	135.00 mm	C63170	4,700	4,577
356011	Polypropylene Wide-Mouth Bottle with Cap Assembly	6	250.00 mL	250 mL	62.00 mm	120.00 mm	C63401	4,700	4,577
356013	Polycarbonate Wide-Mouth Bottle with Cap Assembly	6	250.00 mL	250 mL	62.00 mm	120.00 mm	C63401	4,700	4,577
358275	Polycarbonate Wide-Mouth Bottle	6	250.00 mL	250 mL	62.00 mm	120.00 mm	C63401	4,700	4,577
358326	Polypropylene Wide-Mouth Bottle	6	250.00 mL	250 mL	62.00 mm	120.00 mm	C63401	4,700	4,577
361693	Polycarbonate Bottle with Cap Assembly	24	50.00 mL	50 mL	29.00 mm	104.00 mm	C63166	4,700	4,577
361694	Polypropylene Bottle with Cap Assembly	24	50.00 mL	50 mL	29.00 mm	104.00 mm	C63166	4,700	4,577
357002	Polycarbonate Bottle with Screw Cap	25	50.00 mL	50 mL	29.00 mm	104.00 mm	C63166	4,700	4,577

Table 1.18 Beckman Coulter Bottles and Tubes for the VS 4.750 Rotor *(Continued)*

PN	Description	Package Quantity	Volume		Dimensions		Required Adapter	Performance	
			Nominal	Fill	Diameter	Length		Speed	RCF
357003	Polypropylene Bottle with Screw Cap	25	50.00 mL	50 mL	29.00 mm	104.00 mm	C63166	4,700	4,577
363647	Polycarbonate Open-top Tube	25	50.00 mL	50 mL	29.00 mm	104.00 mm	C63166	4,700	4,577
357007	Polypropylene Open-top Tube	25	50.00 mL	50 mL	29.00 mm	104.00 mm	C63166	4,700	4,577
363664	Polycarbonate Tube with Snap-on Cap	25	50.00 mL	50 mL	29.00 mm	104.00 mm	C63166	4,700	4,577
357005	Polypropylene Tubes with Snap-on Cap	25	50.00 mL	50 mL	29.00 mm	104.00 mm	C63166	4,700	4,577
357448	Polypropylene Tube with Snap-On Cap	500	1.50 mL	1.5 mL	11.00 mm	38.00 mm	C63163	4,700	4,478

Additional Details:

- CHAPTER 2, Tubes and Bottles

Table 1.19 Beckman Coulter Adapters for the VS 4.750 Rotor

PN	Description	Package Quantity	Volume	Dimensions		Performance		
			Nominal	Diameter	Length	Speed	Rmax	RCF
C63192	Adapter for 750 mL Bottle	2	750 mL	96.00 mm	130.00 mm	4,700	188 mm	4,651
C63170 [a]	Adapter for 500 mL Bottle	2	500 mL [b]	85.00 mm	135.00 mm	4,700	185 mm	4,577 [e]
C63171 [a]	Adapter for 500 mL Conical Bottle	2	500 mL [b]	95.50 mm	147.00 mm	4,700	188 mm	4,651 [e]
C63401 [a]	Adapter for 250 mL Bottle	2	250 mL [b]	62.00 mm	120.00 mm	4,700	185 mm	4,577 [e]

Table 1.19 Beckman Coulter Adapters for the VS 4.750 Rotor *(Continued)*

PN	Description	Package Quantity	Volume	Dimensions		Performance		
			Nominal	Diameter	Length	Speed	Rmax	RCF
C63399 [a]	Adapter for 250 mL Conical Bottle Adapter for 200 mL Conical Bottle Adapter for 230 mL Conical Bottle	2	200 to 250 mL [b]	61.00 mm 61.00 mm 62.00 mm	145.00 mm 130.00 mm 139.50 mm	4,700	188 mm	4,651[e]
C63169 [a]	Adapter for 200 mL Conical Bottle Adapter for 250 mL Conical Bottle	2	200 to 250 mL [b]	61.00 mm 61.00 mm	118.00 mm 137.00 mm	4,700	188 mm	4,651[e]
C63398	Adapter for 100 mL Bottles 2 bottles per adapter	2	100 mL [b]	44.00 mm	100.00 mm	4,700	185 mm	4,577[e]
C63397	Adapter for 50 mL Bottles 4 bottles per adapter	2	50 mL [b]	35.00 mm	100.00 mm	4,700	185 mm	4,577[e]
C63166	Adapter for 50 mL Tubes 7 tubes per adapter	2	50 mL [b]	29.00 mm	107.00 mm	4,700	185 mm	4,577[e]
C63167	Adapter for 50 mL Conical Tubes 5 tubes per adapter	2	50 mL [b]	29.00 mm	117.00 mm	4,700	186 mm	4,602[e]
C63168	Adapter for 50 mL Conical Tubes (Not Compatible with Bio-safe Lid) 7 tubes per adapter	2	50 mL [b]	29.00 mm	117.00 mm	4,700	185 mm	4,602[e]
C63373	Adapter for 50 mL Skirted Tubes 5 tubes per adapter	2	50 mL [b]	29.00 mm	117.00 mm	4,700	182 mm	4,503[e]
C63372	Adapter for 25 mL To 30 mL Skirted Tubes 7 tubes per adapter	2	30 mL [b]	25.00 mm	90.00 mm To 107.mm	4,700	175 mm	4,330[e]
C63164	Adapter for 15 mL Conical Tubes 12 tubes per adapter	2	15 mL [b]	16.50 mm	120.00 mm	4,700	187 mm	4,267[e]

Table 1.19 Beckman Coulter Adapters for the VS 4.750 Rotor *(Continued)*

PN	Description	Package Quantity	Volume	Dimensions		Performance		
			Nominal	Diameter	Length	Speed	Rmax	RCF
C63165	Adapter for 15 mL Conical Tubes (Not Compatible with Bio-safe Lid) 15 tubes per adapter	2	15 mL [b]	16.50 mm	120.00 mm	4,700	187 mm	4,267[e]
C63188	Adapter for 17.5 mm Blood Collection Tubes 19 tubes per adapter	2	10 mL [b]	16.00 mm	108.00 mm[c] 131.00 mm[d]	4,700	183 mm	4,528[e]
C63174	Adapter for 16.5 mm Blood Collection Tubes 20 tubes per adapter	2	10 mL [b]	15.00 mm To 16.00 mm	106.00 mm To 118.00 mm	4,700	183 mm	4,528[e]
C63173	Adapter for 13.8 mm Blood Collection Tubes 23 tubes per adapter	2	7 mL [b]	13.00 mm	81.00 mm To 107.00 mm	4,700	182 mm	4,503[e]
C63172	Adapter for 12.8 mm Blood Collection Tubes 37 tubes per adapter	2	5 mL [b]	8.00 mm To 11.00 mm	82.00 mm To 108.00 mm	4,700	180 mm	4,453[e]
C63163	Adapter for 2 mL tubes 26 tubes per adapter	2	2 mL [b]	10.7 mm	42 mm	4,700	181 mm	4,478[e]

a. There is 1 bottle per adapter.
b. Observe manufacturer's recommendations for maximum fill volume.
c. Maximum tube length with bucket lid.
d. Without bucket lid.
e. Observe manufacturer's recommendations for RCF limits. The corresponding RPM can be calculated using the equations in the Glossary

Additional Details:

- CHAPTER 2, Bottle Adapters
- CHAPTER 2, Using Tubes, Bottles, and Buckets

VS 4.750 Replacement Parts

Table 1.20 lists the replacement parts currently available for the VS 4.750 rotor.

Table 1.20 Beckman Coulter Replacement Parts for the VS 4.750 Rotor

Description	Part Number
VS 4.750 Swinging-Bucket Rotor	C63142
VS 4.750 Swinging-Bucket Rotor Yoke	C63400
VS 4.750 Round Bucket, Set of 2	C63152
VS 4.750 Round Bucket Lid, Set of 2	C63153
VS 4.750 Round Bucket O-Ring	961930

VS 4.750-Hex Swinging-Bucket Rotor Specifications

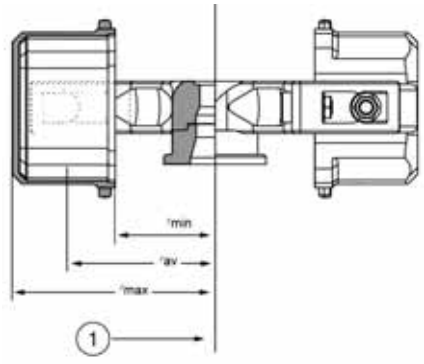

1. Axis of Rotation

Maximum Speed

200-240 VAC ..... 4,700 RPM
120 VAC ..... 4,300 RPM
Critical speed range[a] ..... 700 - 1200 RPM
Maximum Speed for 4°C Operation..... 4,700 RPM
Maximum solution density ..... 1.2 g/mL

Relative Centrifugal Force[b] at maximum speed

(at r_{max} = 181 mm)
120 VAC ..... 3,748 × *g*
200-240 VAC ..... 4,478 × *g*
(at r_{av} = 145.5 mm)
120 VAC ..... 3,013 × *g*
200-240 VAC ..... 3,600 × *g*
(at r_{min} = 110 mm)
120 VAC ..... 2,278 × *g*
200-240 VAC ..... 2,721 × *g*

Conditions requiring speed reductions ..... see *Run Speeds*

Number of buckets 4
Maximum allowable rotor imbalance ..... 20 grams
Available tubes and bottles ..... see Table 1.21
Maximum load allowed in each tube-and-bottle bucket at rated speed (excluding weight of bucket and cover) ..... 900 grams

Approximate acceleration time to maximum speed[c] (fully loaded) ..... 35 seconds
Approximate deceleration time from maximum speed (may vary) (fully loaded) ..... 40 seconds
Maximum cycle count or recommended retirement (whichever comes first) ..... 50,000 cycles or 10 years
Weight of fully loaded rotor (buckets with covers)..... 10.0 kg (22.0 lb)
Rotor yoke material..... anodized aluminum
Bucket material..... anodized aluminum

a. The critical speed range is the range of speeds over which the rotor shifts so as to rotate about its center of mass. Passing through or running at the critical speed range is characterized by some vibration.

b. Relative Centrifugal Force (RCF) is the ratio of the centrifugal acceleration at a specified radius and speed ($r\omega^2$) to the standard acceleration of gravity (*g*) according to the following formula: RCF = $r\omega^2/g$ — where *r* is the radius in millimeters, ω is the angular velocity in radians per second (2 π RPM /60), and *g* is the standard acceleration of gravity (9807 mm/s^2). After substitution: RCF = 1.12*r* (RPM/1000)^2

c. May vary between instruments.

Additional Details:

- VS 4.750-Hex Rotor Description
- VS 4.750-Hex Adapters
- Beckman Coulter Replacement Parts for the VS 4.750-Hex Rotor

VS 4.750-Hex Rotor Description

The Beckman Coulter VS 4.750-Hex swinging-bucket rotor is manufactured in an ISO 9001 facility for use with the Beckman Coulter Allegra V-15R centrifuge. This rotor is intended for indoor use only.

Figure 1.8 VS 4.750-Hex Swinging-Bucket Rotor

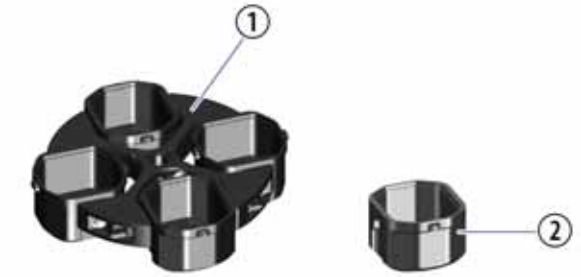

1. VS 4.750 Swinging-Bucket Rotor Yoke
2. Hex Bucket

The VS 4.750-Hex is a four-place swinging-bucket rotor designed to centrifuge 100 15 mL tubes at a 90° angle to the axis of rotation. Up to 1,500 mL of sample volume can be centrifuged per run. The rotor buckets carry adapters that allow centrifugation of a wide range of tube sizes (from 1.5 mL reaction vials to maximum volume of supported tube). The rotor develops centrifugal forces that are suitable for rapidly sedimenting protein precipitates, large particles, cells, and cell debris.

The rotor yoke is made of aluminum. Black anodized aluminum buckets can be run by placing them over pivot pins on the arms of the yoke; they swing out to horizontal position during centrifugation.

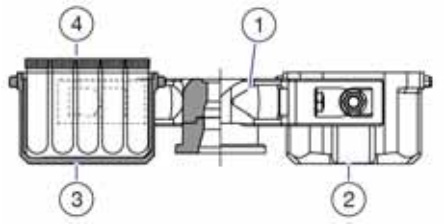

1. Yoke
2. Bucket
3. Adapter
4. Tubes

Refer to the *Beckman Coulter, Inc. Allegra V-15R Rotors Warranty* at the back of this manual for warranty information.

VS 4.750-Hex Adapters

Table 1.21 lists the adapters that can be used with the VS 4.750-Hex rotor along with their specifications.

Table 1.21 Beckman Coulter Adapters for the VS 4.750-Hex Rotor

PN	Description	Package Quantity	Volume	Dimensions		Performance		
			Nominal	Diameter	Length	Speed	Rmax	RCF
B30603	Adapter for 17.5 mm Blood Collection Tubes 25 tubes per adapter	2	10.00 mL [c]	15.00 mm To 16.00 mm	91.00 mm To 131.00 mm [a]	4,700	177 mm	4,379 [b]
B32767	Adapter for Beckman Coulter AutoMate 2500 Family 16 tubes per adapter	2	10.00 mL [c]	15.00 mm To 16.00 mm	91.00 mm To 131.00 mm	4,700	176 mm	4,354 [b]
C63176	Adapter for 13.5 mm Blood Collection Tubes 36 tubes per adapter	2	5 to 7 mL [c]	13.00 mm	82.00 mm To 108.00 mm	4,700	177 mm	4,379 [b]
B32766	Adapter for Beckman Coulter AutoMate 2500 Family 25 tubes per adapter	2	5 to 7 mL [c]	13.00 mm	82.00 mm To 108.00 mm	4,700	178 mm	4,404 [b]

a. Longer tubes may not work in the adapter cells along the perimeter.
b. Observe manufacturer's recommendations for RCF limits. The corresponding RPM can be calculated using the equations in the Glossary.
c. Observe manufacturer's recommendations for maximum fill volume.

Additional Details:

- CHAPTER 2, Bottle Adapters
- CHAPTER 2, Using Tubes, Bottles, and Buckets

VS 4.750-Hex Replacement Parts

Table 1.22 lists the replacement parts currently available for the VS 4.750-Hex rotor.

Table 1.22 Beckman Coulter Replacement Parts for the VS 4.750-Hex Rotor

Description	Part Number
VS 4.750-Hex Swinging-Bucket Rotor	C63143
VS 4.750 Swinging-Bucket Rotor Yoke	C63400
VS 4.750-Hex Bucket, Set of 2	C63154

VS 4.750-96 Swinging-Bucket Rotor Specifications

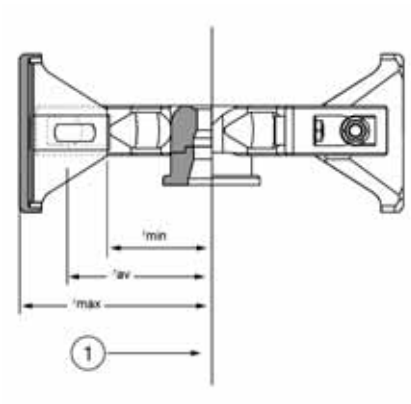

1. Axis of Rotation

Maximum Speed

200-240 VAC ..... 4,700 RPM
120 VAC ..... 4,500 RPM
Critical speed range[a] ..... 500 - 1200 RPM
Maximum Speed for 4°C Operation..... 4,700 RPM
Maximum solution density ..... 1.2 g/mL

Relative Centrifugal Force[b] at maximum speed

(at r_{max} = 157 mm)
120 VAC ..... 3,561 × *g*
200-240 VAC ..... 3,884 × g
(at r_{av} = 125.5 mm)
120 VAC ..... 2,846 × *g*
200-240 VAC ..... 3,105 × g
(at r_{min} = 94 mm)
120 VAC ..... 2,132 × *g*
200-240 VAC ..... 2,326 × g

Conditions requiring speed reductions ..... see *Run Speeds*
Number of carriers 4

Total maximum allowable rotor imbalance ..... 20 grams
Maximum load allowed in each
multi-well plate carrier at rated speed
(excluding weight of carrier and cover) ..... 500 grams
Approximate acceleration time to maximum speed
(may vary between instruments)
(fully loaded) ..... 30 seconds
Approximate deceleration time from maximum speed[c]
(fully loaded) ..... 40 seconds
Maximum cycle count or recommended retirement
(whichever comes first) ..... 50,000 cycles or 10 years
Weight of fully loaded rotor (buckets with covers)..... 8.9 kg (19.6 lb)
Rotor yoke material.....anodized aluminum
Carrier material.....anodized aluminum

a. The critical speed range is the range of speeds over which the rotor shifts so as to rotate about its center of mass. Passing through or running at the critical speed range is characterized by some vibration.

b. Relative Centrifugal Force (RCF) is the ratio of the centrifugal acceleration at a specified radius and speed ($r\omega^2$) to the standard acceleration of gravity (g) according to the following formula: RCF = $r\omega^2/g$ — where r is the radius in millimeters, ω is the angular velocity in radians per second (2π RPM /60), and g is the standard acceleration of gravity (9807 mm/s^2). After substitution: RCF = $1.12r$ (RPM/1000)^2

c. May vary between instruments.

Additional Details:

- VS 4.750-96 Rotor Description
- VS 4.750-96 Labware for Use with Multi-well Plate Carriers
- VS 4.750-96 Replacement Parts

VS 4.750-96 Rotor Description

The Beckman Coulter VS 4.750-96 swinging-bucket rotor is manufactured in an ISO 9001 facility for use with the Beckman Coulter Allegra V-15R centrifuge. This rotor is intended for indoor use only.

Figure 1.9 VS 4.750-96 Swinging-Bucket Rotor

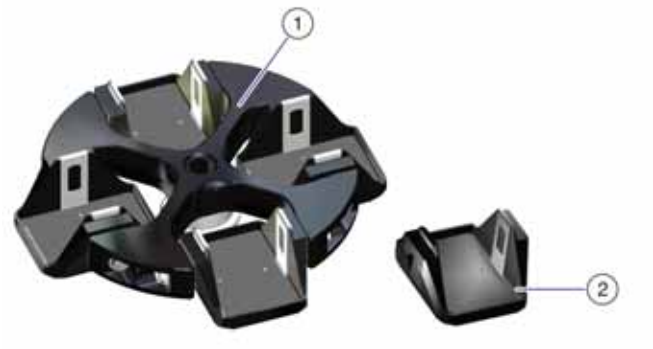

1. VS 4.750 Swinging-Bucket Rotor Yoke
2. Carrier (not bio-safe)

The VS 4.750-96 is a four-place swinging-bucket rotor designed to centrifuge 16 microtiter plates at a 90° angle. Up to 768 mL of sample volume can be centrifuged per run. Each rotor carrier carries a 96-well kit for high-throughput processing (such as a DNA or RNA kit). The carriers can also hold standard microplates used in the serial dilution of small liquid volumes. This can be as either up to four stacked 96-well polypropylene plates, one deep-well plate, or one square-well plate per carrier. The maximum plate height is 61 mm.

The rotor yoke is made of aluminum. Black anodized aluminum carriers can be run by placing them over pivot pins on the arms of the yoke; they swing out to horizontal position during centrifugation.

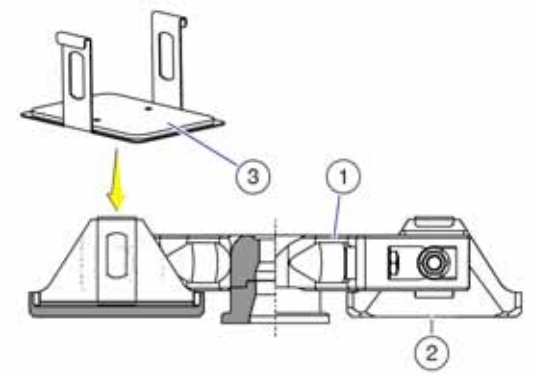

1. Yoke
2. Carrier
3. Carriage

Refer to the *Beckman Coulter, Inc. Allegra V-15R Rotors Warranty* at the back of this manual for warranty information.

VS 4.750-96 Labware for Use with Multi-well Plate Carriers

IMPORTANT While commercially available microtiter plates may fit in the VS 4.750-96 carriages, always observe manufacturer's recommendations for plate loading and adhere to RCF limits. The corresponding RPM can be calculated using the equations in the *Glossary*.

⚠ CAUTION

Risk of equipment damage. Observe manufacturer's recommendations for loading plates and adhere to RCF limits.

Table 1.23 lists Beckman Coulter Multi-well Plate Carriers that can be used with the VS 4.750-96 rotor along with their specifications.

Table 1.23 Beckman Coulter Labware for Use with Multi-well Plate Carriers

Part Number	Description	Volume	Available Accessory	
			Description	Part Number
609844 [a] (pkg/100)	Multi-well plate, 96-well, non-sterile	300 µL/well	Cap strip, non-sterile	267002 (pkg/10)
			Cap strip, sterile	267005 (pkg/10)
			Aluminum foil lid [b]	538619 (pkg/100)

a. The maximum plates per carrier is 3 when using Cap Strips and 4 when not using Cap Strips. Cap Strips are optional; however, if stacking multi-well plates, use Cap Strips between plates for speeds greater than 2900 RPM for this rotor.

b. Requires soft rubber roller (4 in.), part number 538618, for installation

⚠ CAUTION

Risk of equipment damage. If stacking multi-well plates, use Cap Strips (refer to Table 1.23) between plates for speeds greater than 2,900 RPM for this rotor.

⚠ CAUTION

Risk of equipment damage. Don't stack more than 3 plates when using Cap Strips with this rotor (refer to Table 1.23).

Additional Details:

- CHAPTER 2, Multi-well Plate Carriers

VS 4.750-96 Replacement Parts

Table 1.24 lists the replacement parts currently available for the VS 4.750-96 rotor.

Table 1.24 Beckman Coulter Replacement Parts for the VS 4.750-96 Rotor

Description	Part Number
VS 4.750-96 Carrier (Bucket), Set of 2	C63156
VS 4.750-96 Swinging-Bucket Rotor	C63144
VS 4.750 Swinging-Bucket Rotor Yoke	C63400
VS 4.750-96 Carriage, Set of 2	C63157

VS 2.5-96 Swinging-Bucket Rotor Specifications

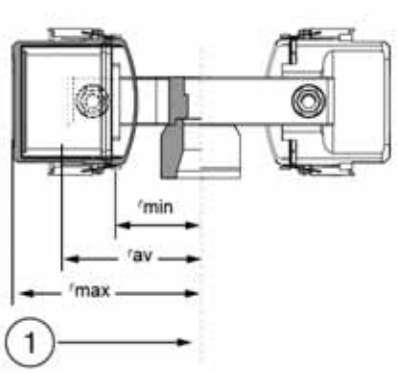

1. Axis of Rotation

Maximum Speed

200-240 VAC ..... 5,700 RPM
120 VAC ..... 5,400 RPM
Critical speed range[a] ..... 400 - 900 RPM
Maximum Speed for 4°C Operation ..... 5,600 RPM
Maximum solution density ..... 1.2 g/mL

Relative Centrifugal Force[b] at maximum speed

(at r_{max} = 151 mm)
120 VAC ..... 4,932 × *g*
200-240 VAC ..... 5,495 × *g*
(at r_{av} = 104.5 mm)
120 VAC ..... 3,413 × *g*
200-240 VAC ..... 3,803 × *g*
(at r_{min} = 58 mm)
120 VAC ..... 1,894 × *g*
200-240 VAC ..... 2,111 × *g*

Conditions requiring speed reductions ..... see *Run Speeds*
Number of carriers 2
Total maximum allowable rotor imbalance .....10 grams

Maximum load allowed in each multi-well plate carrier at rated speed (excluding weight of carrier and cover) ..... 520 grams

Approximate acceleration time to maximum speed[c] (fully loaded) ..... 25 seconds
Approximate deceleration time from maximum speed (fully loaded) ..... 30 seconds
Maximum cycle count (rotor yoke) or recommended retirement (whichever comes first) ..... 50,000 cycles or 10 years
Maximum Cycle Count or recommended retirement (buckets) ..... 20,000 cycles
Weight of fully loaded rotor (buckets with covers)..... 5.8 kg (12.8 lb)
Rotor yoke material..... anodized aluminum
Carrier material.....anodized aluminum

a. The critical speed range is the range of speeds over which the rotor shifts so as to rotate about its center of mass. Passing through or running at the critical speed range is characterized by some vibration.

b. Relative Centrifugal Force (RCF) is the ratio of the centrifugal acceleration at a specified radius and speed ($r\omega^2$) to the standard acceleration of gravity (g) according to the following formula: RCF = $r\omega^2/g$ — where r is the radius in millimeters, ω is the angular velocity in radians per second (2π RPM /60), and g is the standard acceleration of gravity (9807 mm/s^2). After substitution: RCF = $1.12r$ (RPM/1000)^2

c. May vary between instruments.

Additional Details:

- VS 2.5-96 Rotor Description
- VS 2.5-96 Labware for Use with Multi-well Plate Carriers
- VS 2.5-96 Replacement Parts

VS 2.5-96 Rotor Description

The Beckman Coulter VS 2.5-96 swinging-bucket rotor is manufactured in an ISO 9001 facility for use with the Beckman Coulter Allegra V-15R centrifuge. This rotor is intended for indoor use only.

Figure 1.10 VS 2.5-96 Swinging-Bucket Rotor

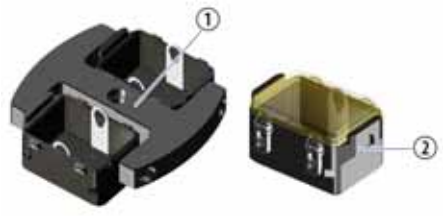

1. VS 2.5-96 Swinging-Bucket Rotor Yoke
2. Carrier with Cover

IMPORTANT Carriers for the Allegra VS 2.5-96 swinging-bucket rotor are certified as bio-safe when used with the carrier cover. See CHAPTER 2, *Bio-Safety*.

The VS 2.5-96 is a two-place swinging-bucket rotor designed to centrifuge 10 microtiter plates at a 90° angle to the axis of rotation. Each rotor carrier carries a 96-well kit for high-throughput processing (such as a DNA or RNA kit). The carriers can also hold standard microplates used in the serial dilution of small liquid volumes. This can be as either up to five stacked 96-well polypropylene plates, or one square-well plate per carrier. The maximum plate height without bio-safe lid is 93 mm, with bio-safe lid it is 80 mm.

Applications for this rotor include culturing small populations of cells, immunoassays, and serial dilution of small liquid volumes. Each carrier can accommodate 520 grams, including the filled plates and the carriage, per centrifuge run.

The rotor yoke is made of aluminum. Black anodized aluminum carriers can be run by placing them over pivot pins on the arms of the yoke; they swing out to horizontal position during centrifugation.

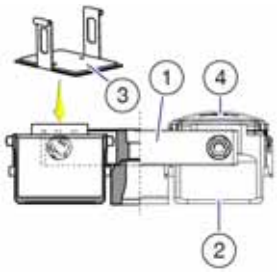

1. Yoke
2. Carrier
3. Carriage
4. Cover

Transparent covers made of a high impact plastic are available for the VS 2.5-96 rotor carriers. The rotor assembly is bio-safe when the covers are used with carriers, and has been tested (see CHAPTER 2, *Bio-Safety*) to demonstrate containment of microbiological aerosols under normal conditions *when used and maintained as instructed.* Each cover requires a gasket that is placed in the perimeter of the cover.

Refer to the *Beckman Coulter, Inc. Allegra V-15R Rotors Warranty* at the back of this manual for warranty information.

VS 2.5-96 Labware for Use with Multi-well Plate Carriers

IMPORTANT While commercially available microtiter plates may fit in the VS 2.5-96 carriages, always observe manufacturer's recommendations for plate loading and adhere to RCF limits. The corresponding RPM can be calculated using the equations in the *Glossary*.

⚠ CAUTION

Risk of equipment damage. Observe manufacturer's recommendations for loading plates and adhere to RCF limits.

Table 1.25 lists Beckman Coulter Multi-well Plate Carriers that can be used with the VS 2.5-96 rotor along with their specifications.

Table 1.25 Beckman Coulter Labware for Use with Multi-well Plate Carriers

Part Number	Description	Volume	Available Accessory	
			Description	Part Number
609844 [a] (pkg/100)	Multi-well plate, 96-well, non-sterile	300 µL/well	Cap strip, non-sterile	267002 (pkg/10)
			Cap strip, sterile	267005 (pkg/10)
			Aluminum foil lid [b]	538619 (pkg/100)

a. The maximum plates per carrier is 5. Cap Strips are optional; however, if stacking multi-well plates, use cap strips between plates for speeds greater than 2950 RPM for this rotor.

b. Requires soft rubber roller (4 in.), part number 538618, for installation.

⚠ CAUTION

Risk of equipment damage. If stacking multi-well plates, use Cap Strips (refer to Table 1.25) between plates for speeds greater than 2,950 RPM for this rotor.

Additional Details:

- CHAPTER 2, Multi-well Plate Carriers

VS 2.5-96 Replacement Parts

Table 1.26 lists the replacement parts currently available for the VS 2.5-96 rotor.

Table 1.26 Beckman Coulter Replacement Parts for the VS 2.5-96 Rotor

Description	Part Number
VS 2.5-96 Swinging-Bucket Rotor Assembly	C63145
VS 2.5-96 Swinging-Bucket Rotor Yoke	C63413
VS 2.5-96 Carrier, Set of 2	C63158
VS 2.5-96 Carrier Cover, Set of 2	C63159

Table 1.26 Beckman Coulter Replacement Parts for the VS 2.5-96 Rotor *(Continued)*

Description	Part Number
VS 2.5-96 Carriage, Set of 2	C63160
Gasket for Cover	C63181

CHAPTER 2

Rotor Preparation and Operation

Chapter Overview

This Chapter covers the following subject matter which is applicable to the Allegra V-15R rotors:

- Bio-Safety
- Rotor Serial Number
- Automatic Rotor Identification
- Accessories
- Run Preparation
- Fixed-Angle Rotor Preparation
- Swinging-Bucket Rotor Preparation
- Operation
- Run Speeds

Bio-Safety

Validation of microbiological containment for fixed-angle rotors with aluminum lids, and swinging-bucket rotors with bucket covers, was done at an independent third-party testing facility: TÜV NORD CERT GmbH, Große Bahnstraße 31, D-22525 Hamburg, Germany, or Public Health England, Porton Down, UK. Improper use or maintenance may affect seal integrity and thus containment.

The Allegra V-15R fixed-angle rotors that are bio-safe compliant have a slightly different shaped knob on the lid assembly. Alignment markings on the knob (Figure 2.1) aid in properly securing the knob to the lid assembly. When the knob is properly secured, the alignment marking on the knob should align with the alignment markings on the rotor body.

Allegra V-15R Swinging-Bucket rotors that are bio-safe provide a bucket cover, or carrier cover, with a sealing O-ring or gasket to achieve the bio-safe designation.

Figure 2.1 Examples of knob for lid assembly of fixed-angle rotors designated as bio-safe compliant.

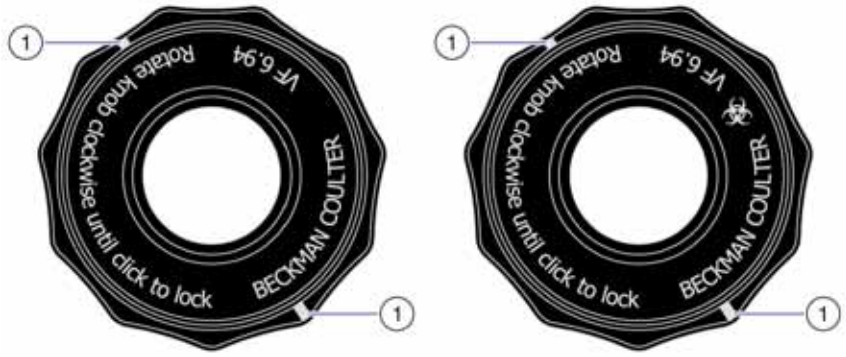

1. Alignment Markings

⚠ WARNING

Use of accessories not listed in this publication may compromise the integrity of the bio-safe seal. Refer to CHAPTER 1, Allegra V-15R Rotor Specifications to view the list of supported accessories for each rotor.

IMPORTANT The seal surfaces of the gaskets and O-rings must be free of dust, fibers, and other contaminants that could affect the seal.

IMPORTANT The lid assembly must be secured to the rotor body before running fixed-angled rotors. Rotate the knob on the rotor clockwise until a click is heard to lock the lid assembly onto the rotor.

IMPORTANT When securing the lid to the rotor body, the alignment marks on the lid must be aligned to the alignment marks on the rotor body.

The following Allegra V-15R rotors are bio-safe compliant:

- VF 48.2 Fixed-Angle Rotor. (See *VF 48.2 Fixed-Angle Rotor Specifications*.)
- VFC 8.50 Fixed-Angle Rotor. (See *VFC 8.50 Fixed-Angle Rotor Specifications*.)
- VF 6.94 Fixed-Angle Rotor. (See *VF 6.94 Fixed-Angle Rotor Specifications*.)

- VF 6.250 Fixed-Angle Rotor. (See *VF 6.250 Fixed-Angle Rotor Specifications*.)
- VS 4.750 Swinging-Bucket Rotor. (Only round bucket version. See *VS 4.750 Swinging-Bucket Rotor Specifications*.)
- VS 2.5-96 Swinging-Bucket Rotor. (See *VS 2.5-96 Swinging-Bucket Rotor Specifications*.)

Rotor Serial Number

Figure 2.2 Rotor Serial Number Format and Location

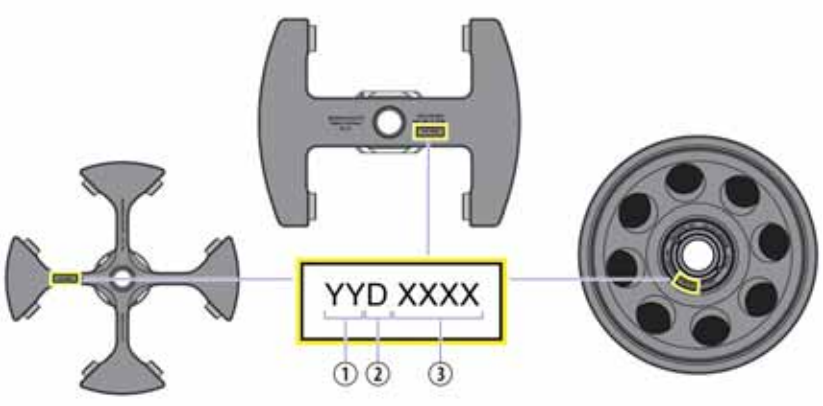

1. Year
2. Manufacturer code
3. Serialized number

Automatic Rotor Identification

The Allegra V-15R centrifuge identifies the rotor type during a run by means of a magnetic sensor system in the rotor chamber, and magnets embedded in the rotor. An over-speed system is used by the centrifuge to ensure that the rotor does not exceed its maximum rated speed.

Accessories

The accessories that can be used with Allegra V-15R rotors can vary from rotor to rotor. Please refer to respective rotor specifications in CHAPTER 1, *Allegra V-15R Rotor Specifications* for additional information.

Tubes and Bottles

Tubes and bottles should be at least half filled. Speed reduction may be required if containers are less than 75 percent full.

To minimize the possibility of leakage from capped tubes or bottles, load the containers with sample, secure the caps, and precool the loaded labware to run temperature before beginning the run.

Available tubes and bottles for the Allegra V-15R centrifuge are listed in CHAPTER 1, *Allegra V-15R Rotor Specifications* for each rotor.

Refer to *Chemical Resistances* (publication IN-175) for information on the chemical compatibilities of labware materials.

Temperature Limits



- Beckman Coulter plastic tubes and bottles have been centrifuge tested for use at temperatures between 2° and 25°C. For centrifugation at other temperatures, pretest containers under anticipated run conditions.
- If plastic tubes and bottles are frozen before use, make sure that they are thawed to at least 2°C before centrifugation.



Thickwall Tubes

Thickwall polypropylene and polycarbonate tubes can be run partially filled (at least half filled) with or without caps, but all opposing tubes for a run must be filled to the same level with liquid of the same density. Do not overfill capless tubes.



Polycarbonate and Polypropylene Bottles

Capped polycarbonate and polypropylene bottles can be run partially filled (not less than half full). Again, all opposing containers for a run must be filled to the same level with liquid of the same density.

Bottle Adapters

Bottles are supported in adapters that fit inside the rotor. Refer to Figure 2.3. The adapters accommodate various bottle sizes and shapes, including conical bottles.

Figure 2.3 Example of Bottle and Adapter



1. Bottle
2. Adapter

The adapters available to the Allegra V-15R centrifuge is listed in CHAPTER 1, *Allegra V-15R Rotor Specifications* for each rotor. Beckman Coulter does not recommend the use of one adapter in

preference to another, nor guarantee the acceptability of a sample tube or bottle to produce quality results. If you need information on a tube or bottle not listed in the Appendix, contact us.

Multi-well Plate Carriers

The multi-well plate carriers (see Figure 2.4) are placed over pivot pins on the arms of the rotor yoke and swing out to horizontal position during centrifugation. Carriages facilitate loading and unloading of the carriers, and provide support to labware during centrifugation.

Figure 2.4 Multi-well Plate Carriers for Allegra V-15R Rotors

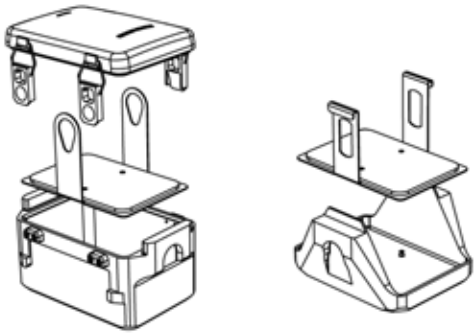

Multi-well plates are used for many applications, including culturing small populations of cells, immunoassays, and serial dilution of small liquid volumes. Carriages used in the carriers can hold multi-well, deep-well, or square well plates. Carriers can also carry a multi-well kit for high-throughput processing (such as DNA or RNA kit). Refer to the specifications for the VS 4.750-96 and VS 2.5-96 swinging-bucket rotors in CHAPTER 1, *Allegra V-15R Rotor Specifications* for information on the number and types of plates that can be used with each rotor.

Transparent covers, made of a high-impact plastic, are available only for the VS 2.5-96 rotor. Carriers with covers properly attached have been tested* to demonstrate containment of microbiological aerosols under normal conditions of the associated Beckman Coulter centrifuge *when used and maintained as instructed.* Each cover requires a gasket that is placed in the perimeter of the cover. The covers are held in place by attached latch assemblies. The covers when properly used with carriers will contain liquids and broken labware particles, reducing the need to clean the centrifuge chamber, and allowing you to take appropriate precautions before opening the covers in the event of breakage.

* Validation of microbiological containment was done at independent third-party testing facilities (TÜV NORD CERT GmbH, Große Bahnstraße 31, D-22525 Hamburg, Germany; or Public Health England, Porton Down, UK.). Improper use or maintenance may affect seal integrity and thus containment.

Run Preparation

Specific information about the Allegra V-15R rotors is given in this manual. Information about the use and care of the centrifuge is contained in the Allegra V-15R Centrifuge IFU (PN C63130 or PN C63131), which should be used together with this manual for complete rotor and centrifuge operation.

NOTE Although rotor components and accessories made by other manufacturers may fit in Allegra V-15R rotors, their safety cannot be ascertained by Beckman Coulter. Use of other manufacturers' components or accessories in Allegra V-15R rotors may void rotor warranty, and should be prohibited by your laboratory safety officer. Only the components and accessories listed in this publication should be used.

Prerun Safety Checks

IMPORTANT Read the *Safety Notice* section at the front of this manual before using the rotor.

1 Make sure that the rotor components and covers are clean, and show no signs of corrosion or cracking.

- If any evidence of damage is present on rotor or a rotor component, do not use it in the centrifuge.

2 Verify that the tubes, bottles, and accessories being used are compatible with the rotor.

- Compatible labware is listed in CHAPTER 1, *Allegra V-15R Rotor Specifications* for each rotor.

3 If fluid containment is required, use capped bottles or tubes.

- All containers carrying physiological fluids should be capped, and not overfilled, to prevent leakage.

4 Check the chemical compatibilities of all materials used (refer to *Chemical Resistances*, publication IN-175).

Fixed-Angle Rotor Preparation

For low-temperature runs, precool the rotor in the centrifuge or in a refrigerator before use—especially before short runs—to ensure that the rotor reaches the required temperature.

NOTE Temperatures may vary slightly between centrifuges. If sample temperature is crucial, test temperature settings on your instrument using water samples.

⚠ WARNING

Risk of contamination. Handle body fluids with care because they can transmit disease. No known test offers complete assurance that such fluids are free of micro-organisms. Some of the most virulent—Hepatitis (B and C) viruses, HIV (I-V), atypical mycobacteria, and certain systemic fungi—further emphasize the need for aerosol protection. Handle all infectious samples according to good laboratory procedures and methods to prevent spread of disease. Because spills may generate aerosols, observe proper safety precautions for aerosol containment.

⚠ CAUTION

Risk of equipment damage or contamination. Rotors operated with improperly balanced loads can cause breakage or contamination. Make sure that filled containers are loaded symmetrically into the rotor and that opposing bottles or tubes are filled to the same level with liquid of the same density.

⚠ WARNING

Risk of personal injury or contamination. Do not run toxic, pathogenic, or radioactive materials in rotors without taking appropriate safety precautions. Bio-safe containment should be used when Risk Group II materials (as identified in the World Health Organization *Laboratory Biosafety Manual*) are handled; materials of a higher group require more than one level of protection.

1 Load the filled containers symmetrically into the rotor (see *Tubes and Bottles* for filling tube and bottle information).

- If running a partial load (i.e., all positions not filled), the load must be arranged symmetrically in the rotor.
- *Opposing tubes must be filled to the same level with liquid of the same density.* The maximum imbalance limit for each Allegra V-15R rotor can be found in the specifications for the rotor being used. Refer to CHAPTER 1, *Allegra V-15R Rotor Specifications*.
- Information for loading a configuration using different tube sizes, or with empty tube locations, can be found in APPENDIX A, *Additional Run Configurations*.

2 Put the lid assembly in place on the rotor, and use the lid assembly knob to tighten the lid onto the rotor.

⚠ CAUTION

Risk of equipment damage. The drive shaft can be damaged if the rotor is forced sideways or dropped onto it. Never force or drop the rotor onto the centrifuge drive shaft.

⚠ WARNING

Risk of personal injury. Before starting the centrifuge, make sure that the rotor tie-down screw is securely fastened.

IMPORTANT Before installing the rotor, ensure the drive shaft is sufficiently lubricated. See CHAPTER 3, *Allegra V-15R Rotor Maintenance* for instructions.

3 Install the rotor into the centrifuge by centering it over the drive shaft, and carefully lowering it straight down.

4 Insert the tie-down screw (Figure 2.5) into the hole on the lid assembly knob. Hold the rotor with one hand, and then tighten the tie-down screw by turning clockwise with the T-handle rotor wrench (until you can no longer tighten by turning) to secure the rotor to the drive shaft. Refer to Figure 2.6.

IMPORTANT Inspect the tie-down screw before each run. Clean and lubricate the tie-down screw as needed. Confirm that the O-ring is present as shown in Figure 2.5.

NOTE If the rotor is left in the centrifuge between runs, before each run make sure it is properly seated and secured on the drive shaft.

Figure 2.5 Tie-down Screw and T-handle rotor wrench

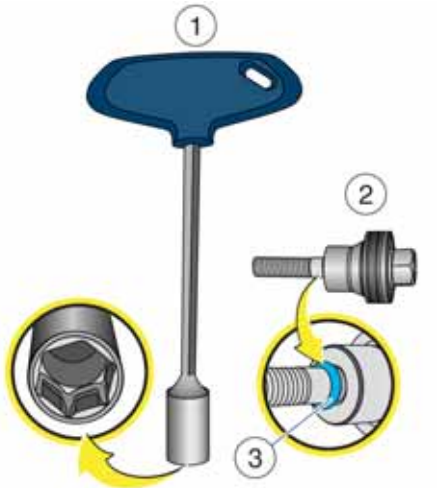

1. Rotor wrench, socket size 13mm
2. Rotor tie-down screw
3. O-ring on tie-down screw

Figure 2.6 Securing Fixed-Angle Rotor to Drive Shaft with Tie-down Screw.



5 Proceed with Operation of the centrifuge.

Swinging-Bucket Rotor Preparation

For low-temperature runs, precool the rotor in the centrifuge or in a refrigerator before use—especially before short runs—to ensure that the rotor reaches the required temperature.

NOTE Temperatures may vary slightly between centrifuges. If sample temperature is crucial, test temperature settings on your instrument using water samples.

⚠ WARNING

Risk of contamination. Handle body fluids with care because they can transmit disease. No known test offers complete assurance that such fluids are free of micro-organisms. Some of the most virulent—Hepatitis (B and C) viruses, HIV (I-V), atypical mycobacteria, and certain systemic fungi—further emphasize the need for aerosol protection. Handle all infectious samples according to good laboratory procedures and methods to prevent spread of disease. Because spills may generate aerosols, observe proper safety precautions for aerosol containment.

⚠ CAUTION

Risk of equipment damage or contamination. Rotors operated with improperly balanced loads can cause breakage or contamination. Make sure that filled containers are loaded symmetrically into the rotor and that opposing bottles or tubes are filled to the same level with liquid of the same density.

⚠ WARNING

Risk of personal injury or contamination. Do not run toxic, pathogenic, or radioactive materials in rotors without taking appropriate safety precautions. Bio-safe containment should be used when Risk Group II materials (as identified in the World Health Organization *Laboratory Biosafety Manual*) are handled; materials of a higher group require more than one level of protection.

Installing the Rotor Yoke

⚠ CAUTION

Risk of equipment damage. The drive shaft can be damaged if the rotor is forced sideways or dropped onto it. Never force or drop the rotor yoke onto the centrifuge drive shaft.

⚠ WARNING

Risk of personal injury. Before starting the centrifuge, make sure that the rotor tie-down screw is securely fastened.

IMPORTANT Before installing the rotor, ensure the drive shaft is sufficiently lubricated. See CHAPTER 3, *Allegra V-15R Rotor Maintenance* for instructions.

1 Carefully lower the yoke straight down onto the centrifuge drive shaft.

- Be sure the yoke is properly seated on the shaft.

2 Insert the tie-down screw (Figure 2.7) into the hole at the center of the yoke. Hold the yoke with one hand, and then tighten the tie-down screw by turning clockwise with the T-handle rotor wrench (until you can no longer tighten by turning) to secure the rotor yoke to the drive shaft. Refer to Figure 2.8.

IMPORTANT Inspect the tie-down screw before each run. Clean and lubricate the tie-down screw as needed. Confirm that the O-ring is present as shown in Figure 2.7.

Figure 2.7 Tie-down Screw and T-handle rotor wrench

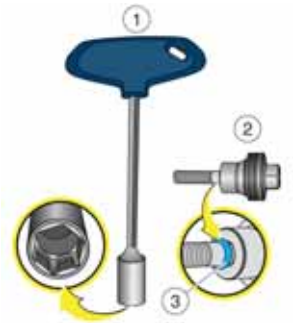

1. Rotor wrench, socket size 13mm
2. Rotor tie-down screw
3. O-ring on tie-down screw

Figure 2.8 Securing Swinging-Bucket Rotor Yoke to Drive Shaft with Tie-down Screw



NOTE If the rotor yoke is left in the centrifuge between runs, then make sure it is properly seated and secured on the drive shaft before each run.

3 Seat the filled buckets onto the yoke pins. Refer to Loading the Buckets for information on filling buckets.

4 Proceed with Operation of the centrifuge.

Loading the Buckets

For runs at other than room temperature, refrigerate or warm the rotor. On the Allegra V-15R, precool the centrifuge beforehand for fast equilibration.

⚠ CAUTION

Do not exceed the maximum load of the buckets. The maximum bucket load can be found engraved on each bucket.

⚠ WARNING

Risk of contamination. Handle body fluids with care because they can transmit disease. No known test offers complete assurance that such fluids are free of micro-organisms. Some of the most virulent—Hepatitis (B and C) viruses, HIV (I-V), atypical mycobacteria, and certain systemic fungi — further emphasize the need for aerosol protection. Handle all infectious samples according to good laboratory procedures and methods to prevent spread of disease. Because spills may generate aerosols, observe proper safety precautions for aerosol containment.

⚠ WARNING

Risk of personal injury or contamination. Do not run toxic, pathogenic, or radioactive materials in this rotor without taking appropriate safety precautions. Bio-safe containment should be used when Risk Group II materials (as identified in the World Health Organization *Laboratory Biosafety Manual*) are handled; materials of a higher group require more than one level of protection.

Symmetrical and Balanced Loading

Beckman Coulter supplies buckets and carriers in weight-matched sets to make balancing easier (the weight is marked on each bucket and carrier). To prevent accidental imbalance, it is important to keep matched sets of buckets as well as matched sets of adapters together, and to weigh other adapters to be sure they are approximately the same. Marking matched adapter sets will help you keep them together.

Buckets can be loaded before or after installing them on the rotor yoke. In either case, fill the labware first and then load the labware into the buckets. To ensure optimal performance and stability, the rotor must be loaded symmetrically. Information for loading a configuration using different tube sizes, or with empty tube locations, can be found in APPENDIX A, *Additional Run Configurations*.

Two factors affect symmetric loading:

1. The buckets or carriers must be loaded symmetrically with respect to their pivotal axes.
2. The rotor should be loaded symmetrically with respect to its center of rotation.

For best results, load opposing buckets or carriers with the same type of labware containing the same amounts of fluid of equal density. Detailed information about weight and content load for specific rotor buckets and carriers per rotor can be found in CHAPTER 1, *Allegra V-15R Rotor Specifications* within this manual.

It is not necessary to completely fill all tubes* or positions in buckets; however, partially filled buckets must be balanced with respect to the bucket pivotal axis (see Figure 2.9). In multi-tube adapters, each tube should be placed so that its weight is balanced by a tube in a diametrically opposite position across the pivotal axis in the same adapter. Adapters placed in opposing buckets should also be filled the same way.

Figure 2.9 Bucket pivotal axis at rest and at speed

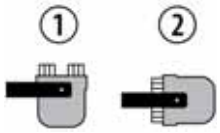

1. At Rest
2. At Speed

* Fill tubes at least half full. Speed reduction may be required for fill volumes below 75 percent.

Using Tube and Bottle Buckets

Whether you are running tubes or bottles, you must load the buckets symmetrically around the center of rotation and each bucket must be loaded symmetrically with respect to its pivotal axis (see *Symmetrical and Balanced Loading*, above).

⚠ CAUTION

Risk of contamination. Buckets are designed to be used only with bottle adapters. Do not pour samples directly into buckets, or bottle sleeves. Except for the 750 mL bottle (PN C63392), do not load bottles or tubes directly into the buckets. Do not use labware that is not specified for use in rotors for the Allegra V-15R centrifuge.

⚠ CAUTION

Risk of equipment damage. For rotors with more than two positions, never run the rotor with only two positions filled. All four positions on the rotor must contain buckets or carriers during a run. Do not run mixed bucket types.

Figure 2.10 Examples of Correctly and Incorrectly Loaded Buckets

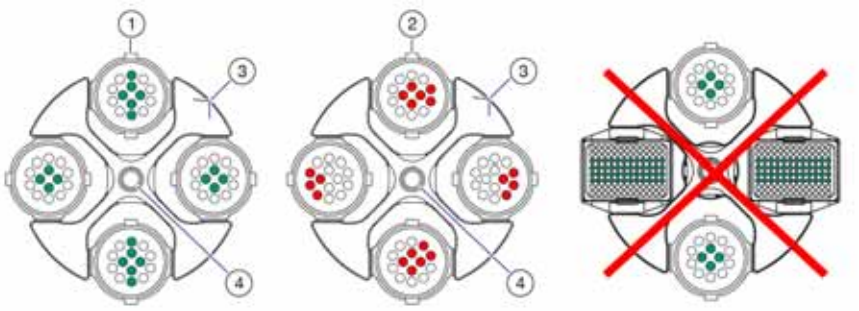

1. Balanced Load (Correct)
2. Unbalanced Load (Incorrect)
3. Pivotal Axes of Buckets
4. Center of Rotation

NOTE Contents of opposing buckets must be the same, and each bucket must be balanced on its pivotal axis.

Using Tubes, Bottles, and Buckets

Using Bottles in Adapters

Load bottles into their appropriate adapters (see adapters listed in CHAPTER 1, *Allegra V-15R Rotor Specifications* for the specific rotor), then place the filled adapters in the rotor buckets. If only two bottles are run, place them in opposite buckets. Make sure the other two buckets contain at least a minimal "blank" load to prevent rotor imbalance. You can use two water-filled bottles in adapters to balance the load (See *Symmetrical and Balanced Loading*).

Loading Adapters in the Buckets

For swinging-bucket rotors with four buckets or carriers (VS 4.750, 4.750-96, 4.750-Hex) where only two loaded adapters are run, place them in opposing buckets. Make sure the other two buckets contain at least a minimal "blank" load to prevent rotor imbalance. You can use two water-filled bottles in adapters to balance the load (See *Symmetrical and Balanced Loading*).

Using Bucket Covers

Install the cover as follows:

NOTE Because of the shape of the covers, some longer tubes may not fit in all positions of the adapter when covers are used.

1 Make sure that the bucket and the bucket cover surfaces are clean, dry, and undamaged.

2 Ensure that the O-ring is in good condition.

- Place the O-ring on the ledge inside the bucket.

Figure 2.11 Location of O-ring



1. Insert O-ring here for VS 4.750

3 Ensure that the pivot pins are lightly lubricated with Spinkote.

4 Place the cover on the bucket with the latches perpendicular to the pin sockets.

Figure 2.12 Securing cover on bucket with latches

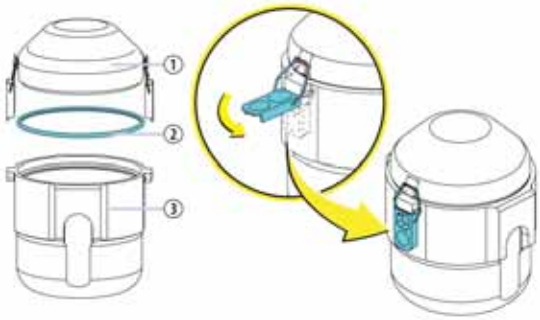

1. Cover
2. O-ring
3. Bucket

5 Snap the latches down.

6 To remove the cover after a run, carefully release the latches and then remove the cover.

Loading Buckets Onto the Yoke

1 Attach each bucket to the yoke by aligning the grooves in the bucket sides with the pivot pins, then sliding the buckets down until the pivot pins are seated in the bucket pockets.

IMPORTANT The VS 4.750 yoke requires all 4 positions to be loaded even if only 2 buckets or carriers will contain tubes or bottles.

2 Gently swing the buckets or carriers to ensure that they are properly seated on the pivot pins.

⚠ CAUTION

Risk of equipment damage. Never run the rotor with only partial positions filled. All positions on the rotor must contain buckets or carriers during a run. Attach all buckets and carriers, loaded or empty, to the rotor yoke. Refer to Symmetrical and Balanced Loading.

Using Multi-well Plate Carriers

Fill the labware first, then load the labware into carriages and the carriages into the carriers. You must load the carriers symmetrically around the center of rotation and each carrier must be loaded symmetrically with respect to its pivotal axis.

Symmetrical and Balanced Loading

NOTE Beckman Coulter supplies carriers in weight-matched sets to make balancing easier (the weight is engraved on each carrier). To prevent accidental imbalance, it is important to keep matched sets of carriers together.

Two factors affect symmetric loading:

1. The carriers must be loaded symmetrically with respect to their pivotal axes.
2. The rotor should be loaded symmetrically with respect to its center of rotation.

For best results, load opposing carriers with the same type of labware containing the same amounts of fluid of equal density. Additionally, opposing carriers and their contents should weigh approximately the same. Do not exceed the rated maximum load for multi-well plate carriers.

Figure 2.13 Examples of Correctly and Incorrectly Loaded Multi-well Plates

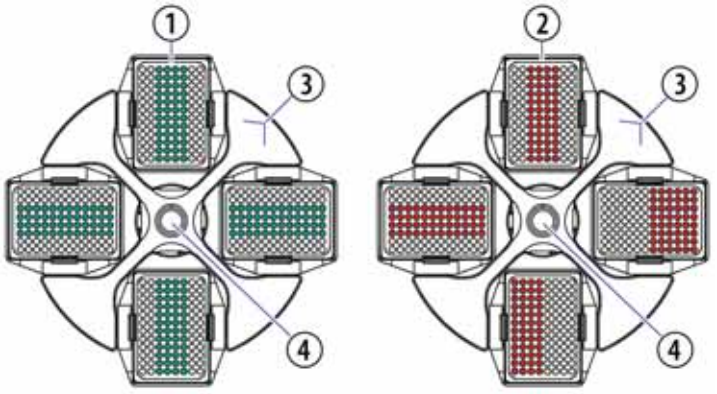

1. Balanced Load (Correct)
2. Unbalanced Load (Incorrect)
3. Pivotal Axes of Buckets
4. Center of Rotation

For situations where only two filled multi-well plate carriers are needed for a run, but the rotor being used has more than two positions, install the filled carriers opposite each other in the rotor. Then, install two additional carriers or buckets (they can be empty) on the rotor to prevent rotor imbalance during the run.

IMPORTANT The VS 4.750 yoke requires all 4 positions to be loaded even if only 2 carriers will be loaded with plates.

---

1 Insert the filled plate or plates into the carriage.

- If using two or more Beckman Coulter plates per carrier, place a cap strip between the plates to prevent breakage during centrifugation.

Figure 2.14 Examples of carriage with plates

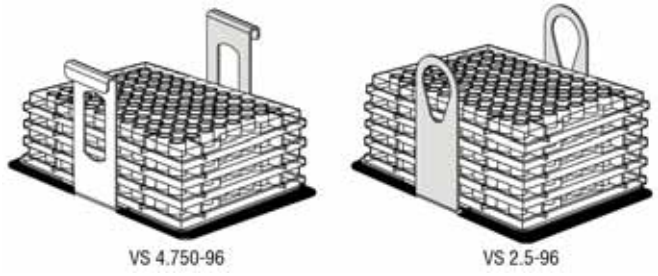

Carriage with plates for the VS 4.750-96 rotor, and carriage with plates for the VS 2.5-96 rotor.

NOTE Observe manufacturer's run speed and stacking limitations if using other manufacturers' multi-well plates. RCF and stacking limitations vary widely between manufacturers — pretest other manufacturers' plates using water instead of valuable sample.

---

2 Grasp the carriage by the handles and lower it into the carrier.

3 For the VS 2.5-96 rotor, make sure that carrier cover gaskets are in good condition and secured to the covers.

IMPORTANT The seal surfaces of the gaskets and O-rings for Allegra V-15R rotors must be free of dust, fibers, and other contaminants that could affect the seal.

4 Put covers for the VS 2.5-96 rotor on the carriers with the latches perpendicular to the pin sockets.

- Snap the latches down and secure them under the carrier rim.

Figure 2.15 Securing cover on carrier with latches

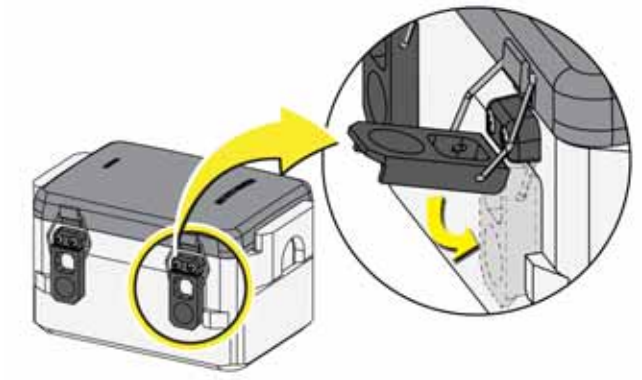

5 Ensure that the pivot pins are lightly lubricated with Spinkote.

6 Attach each carrier to the yoke by aligning the grooves in the sides with the pivot pins, then sliding the carrier down until the pivot pins are seated in the pin pockets.

⚠ CAUTION

Risk of equipment damage. For rotors with more than two positions, never run the rotor with only two positions filled. All four positions on the rotor must contain buckets or carriers during a run. Do not run mixed bucket types.

7 Gently swing the carriers to ensure that they are properly seated on the pivot pins.

Operation

1 Refer to the *Allegra V-15R Centrifuge* IFU for centrifuge operation. (See *Related Documents* on back page of this manual).

2 See *Run Speeds* for information about speed limitations.

Removal and Sample Recovery

⚠ WARNING

Risk of contamination. If disassembly of the buckets or carriers reveals evidence of leakage, you should assume that some fluid escaped the rotor. Apply appropriate decontamination procedures to the centrifuge and accessories as determined by your laboratory safety officer.

For Fixed-Angle Rotors

1 If removing the rotor, unscrew the rotor tie-down and then lift the rotor straight up and off the drive shaft.

2 Turn the knob on the lid assembly counterclockwise to remove the rotor lid and unload the containers.

For Swinging-Bucket Rotors

1 Remove the buckets or carriers from the centrifuge.

2 If using covers remove them, and also remove the labware from the buckets or carriers.

3 If removing the rotor yoke, unscrew the rotor tie-down and then lift the yoke straight up and off the drive shaft.

Run Speeds

The centrifugal force at a given radius in a rotor is a function of speed. Comparisons of forces between different rotors are made by comparing the rotors' relative centrifugal force (RCF). When rotational speed is adjusted so that identical samples are subjected to the same RCF in two different rotors, the samples are subjected to the same force.

The RCF at each speed is automatically calculated by the Allegra V-15R centrifuge software. If the RCF is entered, the Allegra V-15R calculates the equivalent RPM (revolutions per minute).

Run speeds must be reduced in the following circumstances:

- The maximum rotor load (in grams) is engraved on the rotor. If the weight of the load exceeds the maximum load for the rotor, or if the solution density is more than 1.2 g/mL, reduce the maximum allowable run speed according to the following equation:

$$\text{reduced maximum speed} = (\text{maximum speed of rotor in RPM}) \sqrt{\frac{\text{Maximum rotor load}}{\text{heaviest load in grams}}}$$

⚠ CAUTION

Do not select rotational speed in excess of the maximum speed for the installed rotor. Refer to CHAPTER 1, *Allegra V-15R Rotor Specifications* for the maximum speed of the rotor being used.

The maximum run speed listed in the rotor specifications is for operation when all conditions are within the standard specifications. Speeds must be reduced under the following circumstances:

- When certain glass or plastic tubes are used, reduce rotor speed to prevent tube breakage. Follow the manufacturers' recommendations regarding maximum speed for the tubes. Because the strength of tubes can vary between lots, and depend on handling and usage, Beckman Coulter highly recommends that you pretest these tubes in this rotor (using water instead of valuable sample) to determine optimal operating conditions.
- If non-precipitating solutions more dense than 1.2 g/mL are centrifuged, the maximum allowable run speed must be reduced according to the following equation:

$$\text{reduced maximum speed} = (\text{maximum speed of rotor}) \sqrt{\frac{1.2\ \text{g/mL}}{\rho}}$$

  where ρ is the density of the tube contents. This speed reduction will protect the rotor from excessive stresses due to the added tube load.

- *Further speed limits must be imposed* when self-forming-gradient salts are centrifuged, as the equation does not predict concentration limits/speeds that are required to avoid precipitation of salt crystals.

CHAPTER 3

Allegra V-15R Rotor Maintenance

Chapter Overview

This Chapter covers the following subject matter which is applicable to the Allegra V-15R rotors:

- Care and Maintenance
- Troubleshooting
- Returning a Rotor
- Supply List

Care and Maintenance

The following care and maintenance procedures should be performed on a regular basis for Allegra V-15R rotors:

- Fixed-Angle Rotor Maintenance
- Swinging-Bucket Rotor Maintenance
- Decontamination
- Sterilization and Disinfection
- Tube Breakage (Including SST or Corvac Tubes)
- Disposal Information
- Storage

Fixed-Angle Rotor Maintenance

⚠ CAUTION

Risk of equipment damage. Corrosion begins in scratches and may open fissures in the rotor with continued use. Do not use sharp tools on the rotor that could cause scratches in the rotor surface.

Do not use sharp metal tools on the rotor, as the surface can get scratched. Corrosion begins in scratches and may open fissures in the rotor with continued use. The corrosion process accelerates with speed induced stresses. The potential for damage from corrosion is greatest in aluminum rotors and components.

---

1 Periodically (at least monthly) inspect the rotor, especially inside cavities, for rough spots, cracks, pitting, white powder deposits (frequently aluminum oxide), or heavy discoloration.
   - If any of these signs are evident, do not run the rotor.
   - Contact us for information about the Field Rotor Inspection Program and the Rotor Repair Program.

Figure 3.1 Rotor body areas to check for corrosion

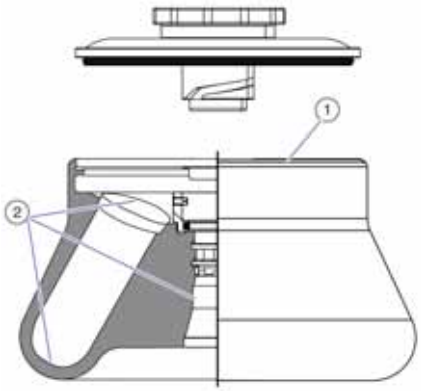

1. Rotor Body
2. Check for Corrosion

2 If the same rotor is being consistently used, remove the rotor after every 20 runs to ensure that the tie-down is secure.

3 Regularly check the condition of the tie-down screw; if it is worn or damaged, replace it.

4 If the rotor is left in the centrifuge for long periods of time, remove it at least once a month for cleaning and lubrication.

5 Regularly check the condition of O-rings or gaskets, and replace any that are worn or damaged.

6 Regularly apply a thin, even coat of Spinkote lubricant to the hub of the centrifuge to prevent rotor sticking.

7 Rotor should not be used beyond the published cycle life. Refer to CHAPTER 1, *Allegra V-15R Rotor Specifications* for the rotor being used.

Refer to *Chemical Resistances* (Publication IN-175) for the chemical compatibilities of rotor and accessory materials. Contact us for information about the Field Rotor Inspection Program and the rotor repair center.

Cleaning

⚠ CAUTION

Risk of equipment damage. Salts and other corrosive materials can damage the rotor and rotor components. Wash the rotor and rotor components immediately if salts or other corrosive materials are used or if spillage has occurred, according to your laboratory safety procedures.

1 Refer to Figure 3.2. Remove the O-rings, and wash the rotor, lid, and O-rings in a mild detergent that will not damage the rotor such as Beckman Solution 555 (see Supply List).



- The Rotor Cleaning Kit contains two plastic-coated brushes, and two quarts of Solution 555, for use with rotors and accessories.
  - — Dilute the detergent 10 to 1 with water.

NOTE Do not wash rotor components in a dishwasher. Do not soak in detergent solution for long periods, such as overnight.

Figure 3.2 Lid and O-Ring to clean

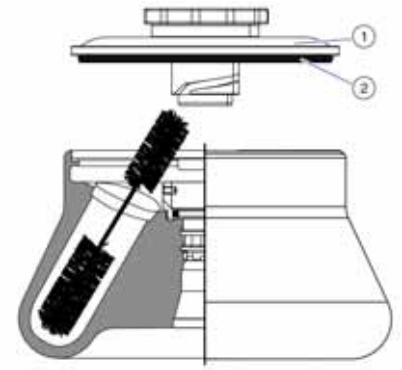

1. Lid
2. O-Ring

2 Thoroughly rinse the cleaned rotor and components with distilled water.

3 Air-dry the rotor and lid upside down.

IMPORTANT Do not use acetone to dry the rotor.

4 Lightly but evenly lubricate the drive shaft with Spinkote.

Swinging-Bucket Rotor Maintenance

⚠ CAUTION

Risk of equipment damage. Corrosion begins in scratches and may open fissures in the rotor with continued use. Do not use sharp tools on the rotor that could cause scratches on the rotor surfaces.

1 Periodically (at least monthly) inspect the rotor yoke, buckets, and/or multi-well plate carriers, especially inside cavities, for rough spots or pitting, white powder deposits—frequently aluminum oxide—or heavy discoloration.

- If any of these signs are evident, do not run the rotor.
- Contact us for information about the Field Rotor Inspection Program and the rotor repair center.

2 Approximately every 100 to 200 runs, and after cleaning and/or autoclaving, do the following:

- Clean the rotor pivot pins and pin pockets to remove any residue.
- Apply a small amount of Spinkote to the pivot pins (see Figure 3.3).

- Install the bucket on the rotor yoke and manually swing it back and forth to distribute the lubricant.
- Repeat this process for all buckets.

Figure 3.3 Lubricating Pivot Pin/Bucket Contact Areas

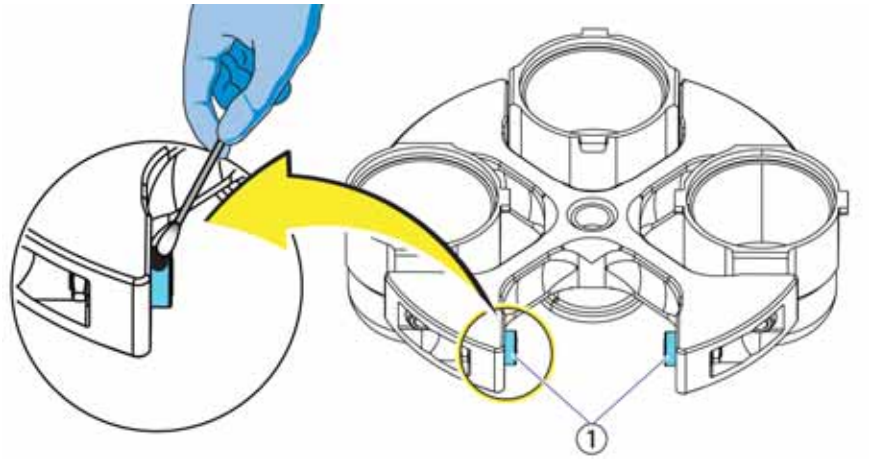

1. Lubrication Placement (both pin sockets)

3 If the same rotor is being consistently used, remove the rotor after every 20 runs to ensure that the tie-down is secure.

4 Regularly check the condition of the tie-down screw; if it is worn or damaged, replace it.

5 Regularly check the condition of O-rings or gaskets, and replace any that are worn or damaged.

6 Rotor should not be used beyond the published cycle life. Refer to CHAPTER 1, *Allegra V-15R Rotor Specifications* for the rotor being used.

Cleaning

⚠ CAUTION

Risk of equipment damage. Salts and other corrosive materials can damage the rotor and rotor components. Wash the rotor and rotor components immediately if salts or other corrosive materials are used or if spillage has occurred, according to your laboratory safety procedures. Do not allow corrosive materials to dry on buckets.

Under normal use, wash the rotor frequently to prevent buildup of residues.

1 Remove the cover O-ring from the bucket before cleaning.

2 Wash the rotor yoke, buckets, bucket covers, O-rings, and multi-well plate carriers and covers in a mild detergent, such as Beckman Solution 555, that won't damage the rotor.



- The Rotor Cleaning Kit contains two plastic coated brushes, and two quarts of Solution 555, for use with rotors and accessories.
  - — Dilute the detergent 10 to 1 with water.

NOTE Do not wash rotor components in a dishwasher. Do not soak in detergent solution for long periods, such as overnight.

3 Thoroughly rinse the cleaned rotor components with distilled water.

4 Air dry the rotor components upside down.

IMPORTANT Do not use acetone to dry the rotor.

5 Lubricate the pivot pins as described in the Swinging-Bucket Rotor Maintenance section.

6 Before reinstalling the rotor yoke, lightly lubricate the centrifuge hub with Spinkote to prevent the rotor from sticking.

Decontamination



⚠ WARNING

Risk of contamination. If the rotor or accessories are contaminated with toxic or pathogenic solutions, follow appropriate decontamination procedures as determined by your laboratory safety officer.

Rotors and/or rotor components and accessories contaminated with radioactive or pathogenic materials must be decontaminated, following appropriate laboratory safety guidelines and/or other regulations.

NOTE Strong bases and/or high-pH solutions can damage aluminum rotors and components.

If the rotor (and/or rotor components and accessories) becomes contaminated with radioactive material, decontaminate using a solution that will not damage the anodized surfaces. Beckman Coulter has tested a number of solutions and found two that do not harm anodized aluminum: RadCon Surface Spray or IsoClean Solution (for soaking),* and Radiacwash.†

NOTE IsoClean can cause fading of colored anodized surfaces. Use it only when necessary, and do not soak rotor components longer than the minimum time specified in the IsoClean usage instructions. Then remove it promptly from surfaces.

While Beckman Coulter has tested these methods and found that they do not damage the rotor or components, no guarantee of decontamination is expressed or implied. Consult your laboratory safety officer regarding the proper decontamination methods to use.

If the rotor or accessories are contaminated with toxic or pathogenic solutions, follow appropriate decontamination procedures as outlined by appropriate laboratory safety guidelines and/or other regulations. Consult *Chemical Resistances* (publication IN-175) to be sure the decontamination method will not damage any part of the rotor, rotor components, or rotor accessories.

Sterilization and Disinfection



Adhere to the following for proper sterilization and disinfection of Allegra V-15R rotors:

- Allegra V-15R rotors, rotor yokes, buckets, and multi-well plate carriers can be autoclaved at 121°C for up to one hour.

  NOTE Remove the lid from a fixed-angled rotor, and place the rotor, lid, and O-rings in the autoclave upside down.

  NOTE For swinging-bucket rotors, place the rotor yoke, buckets (without covers), and multi-well plate carriers in the autoclave upside down.

- Bucket covers, carrier covers, and carriages can be autoclaved at 121°C for up to 20 minutes.
- A cold-sterilization technique should be used for tube and bottle adapters. Consult *Chemical Resistances* (publication IN-175).

  NOTE Unless otherwise indicated, adapters for Allegra V-15R tubes and bottles are made of polypropylene.

Table 3.1 Adapters not made of polypropylene

Material	Part Numbers
Nitrile Butadiene Rubber	C63410, C63411
Nylon	C63371, C63414, C63415, C63416
Polyethylene Terephthalate (PET)	C63171

IMPORTANT Adapters made of nylon are not chemically resistant to hydrogen peroxide.

* In U.S., contact Nuclear Associates (New York); in Eastern Europe and Commonwealth States, contact Victoreen GmbH (Munich); in South Pacific, contact Gammasonics Pty. Ltd. (Australia); in Japan, contact Toyo Medic Co. Ltd. (Tokyo).

† In U.S., contact Biodex Medical Systems (Shirley, New York); internationally, contact the U.S. office to find the dealer closest to you.

⚠ WARNING

Risk of personal injury or property damage. The rotor and accessories are not designed for use with materials capable of developing flammable or explosive vapors. Do not centrifuge such materials in, nor handle or store them near the centrifuge. Always observe appropriate cautionary procedures as defined by your safety officer when using flammable solvents.

⚠ WARNING

Risk of chemical injury from bleach. To avoid contact with the bleach, use barrier protection, including protective eyewear, gloves, and suitable laboratory attire. Refer to the Safety Data Sheet for details about chemical exposure before using the chemical.

⚠ WARNING

Risk of personal injury or equipment damage. Ethanol is a flammability hazard. Do not use it in or near operating centrifuges.

Ethanol (70%) or hydrogen peroxide (6%) may be used on all rotor components, including those made of plastic. High-quality, fragrance-free, gel-free bleach (5 to 6% solution of sodium hypochlorite - available chlorine) may be used, but may cause discoloration of anodized surfaces. Use the minimum immersion time for each solution, per laboratory standards.

While Beckman Coulter has tested these methods and found that they do not damage the rotor or components, no guarantee of sterility or disinfection is expressed or implied. When sterilization or disinfection is a concern, consult your laboratory safety officer regarding proper methods to use.

Refer to *Use and Care of Tubes and Bottles* (publication IN-192), included in each box of tubes or bottles, for tube sterilization and disinfection procedures.

Tube Breakage (Including SST or Corvac Tubes)

⚠ WARNING

Risk of personal injury or contamination. Tubes and well plates can break during centrifugation. When working with potentially hazardous materials, remove fixed-angle rotor lids or bucket/carrier covers in an appropriate hood or biological safety cabinet. Consult your laboratory safety officer regarding the proper methods to use.

⚠ CAUTION

Risk of contamination or equipment damage. Tubes and well plates can break during centrifugation. For tube or plate breaks, immediately clean the rotor assembly and adapters thoroughly in accordance to your laboratory safety procedures to reduce the potential for corrosion.

If a glass bottle or tube breaks, remove the glass very carefully from the rotor, adapter, and/or bucket. Imbedded glass particles that remain in the rotor cavities, adapter, and/or bucket can cause tube failure during subsequent runs. Clean the rotor thoroughly immediately following a bottle or tube breakage.

If an SST or Corvac tube breaks, the tube's silicone gel barrier material becomes laced with glass fragments and the tube contents contaminate the entire tube adapter and bucket.

If one of these tubes breaks in an adapter in a bucket, use the following procedure:

1. Fill the bucket with water.
2. Autoclave the entire bucket and contents at 121°C for 20 minutes.
3. Decant any remaining water, and dislodge the tube adapter (do not remove it) over a waste container.
4. Working under a hood and using plastic gloves, immerse the bucket and tube adapter (intact) in a beaker or similar vessel containing ethyl acetate.
5. Scrub the adapter with a brush, and decant the ethyl acetate mixture into a waste bottle for proper disposal.
6. Rinse with water, and air dry the bucket and tube adapter.

Disposal Information

Clean and decontaminate the rotor per the *Care and Maintenance* section of this manual before disposal. Users are encouraged to check with local waste disposal authorities for specific disposal requirements.

Storage

When not in use, store the rotor in a dry environment. For a fixed-angle rotor, remove the lid assembly when storing to allow air circulation so that moisture will not collect in the tube cavities. Do not store the rotor in the centrifuge. Refer to *Chemical Resistances* (publication IN-175) for the chemical compatibilities of rotor and accessory materials. Contact us for information about the Field Rotor Inspection Program and the rotor repair center.

Troubleshooting

Refer to the *Allegra V-15R Centrifuge For IVD Use Instructions For Use* (PN C63131), or the *Allegra V-15R Centrifuge Instructions For Use* (PN C63130) for Troubleshooting information.

Returning a Rotor

Before returning a rotor or accessory for any reason, permission must be obtained from Beckman Coulter, Inc. Contact us to obtain the required form, entitled *Returned Material Authorization* (RMA) for United States returns, or *Returned Goods Authorization* (RGA) for international returns. The form should contain the following information:

- Rotor type and serial number.
- History of use (approximate frequency of use).
- Reason for the return.
- Original purchase order number, billing number, and shipping number, if possible.
- Name and e-mail address of the person to be notified upon receipt of the rotor or accessory at the factory.
- Name and e-mail address of the person to be notified about repair costs, etc.

NOTE It is the customer's responsibility to ensure that all parts are free from pathogens and/or radioactivity. Sterilization and decontamination must be done before returning the parts. Smaller items (such as tubes, bottles, etc.) should be enclosed in a sealed plastic bag.

All parts must be accompanied by a note, plainly visible on the outside of the box or bag, stating that they are safe to handle and that they are not contaminated with pathogens or radioactivity. ***Failure to attach this notification will result in return or disposal of the items without review of the reported problem.***

Use the address label printed on the RGA/RMA form when mailing the rotor and/or accessories.

Supply List

NOTE Publications referenced in this manual can be obtained at www.beckman.com or contact us.

NOTE For Safety Data Sheets (SDS) information, go to the Beckman Coulter website at www.beckman.com.

Contact us for detailed information on ordering parts and supplies. For your convenience, a partial list is given below.

Allegra V-15R Rotor Supplies

Rotor Cleaning Kit	339558
Solution 555 (1 qt)	339555
Spinkote lubricant (2 oz)	306812
Rotor tie-down screw	C16205
T-handle rotor wrench, size 13	368246

APPENDIX A

Additional Run Configurations

Appendix A Overview

The following run configurations can also be used with the Allegra V-15R centrifuge:

- Centrifugation With Different Tube Sizes
- Centrifugation With Some Empty Tube Locations

IMPORTANT In order to avoid an imbalance error when using a configuration with different tube sizes, or a configuration with some empty tube locations, filled tubes should be placed symmetrically into a rotor. If running a partial load (i.e., all positions not filled), the load must be arranged symmetrically in the rotor.

Centrifugation With Different Tube Sizes

It is possible to do a run with different tube sizes in Allegra V-15R rotors. If doing so, it is very important that the axial symmetric inserts are identical. An example of a correct and incorrect different tube size configuration in a swinging-bucket rotor is shown in Figure A.1.

Figure A.1 Example of loading different tube sizes correctly and incorrectly in a swinging-bucket rotor

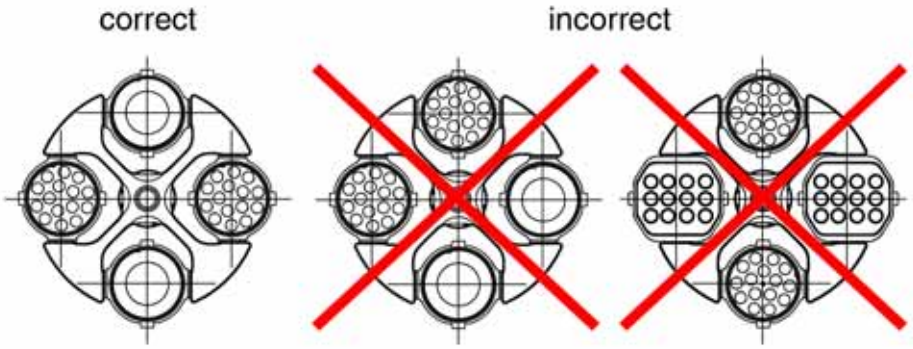

Centrifugation With Some Empty Tube Locations

For a centrifugation where some empty tube locations are being used, adhere to the following:

- For swinging-bucket rotors, install the tubes axially symmetric so that buckets and their inserts are loaded evenly. Refer to Figure A.2.
- For fixed-angle rotors, do not load on only one axis. Refer to Figure A.2.

Figure A.2 Example of loading with some empty tube locations correctly, and incorrectly, in a fixed-angle rotor and a swinging-bucket rotor.

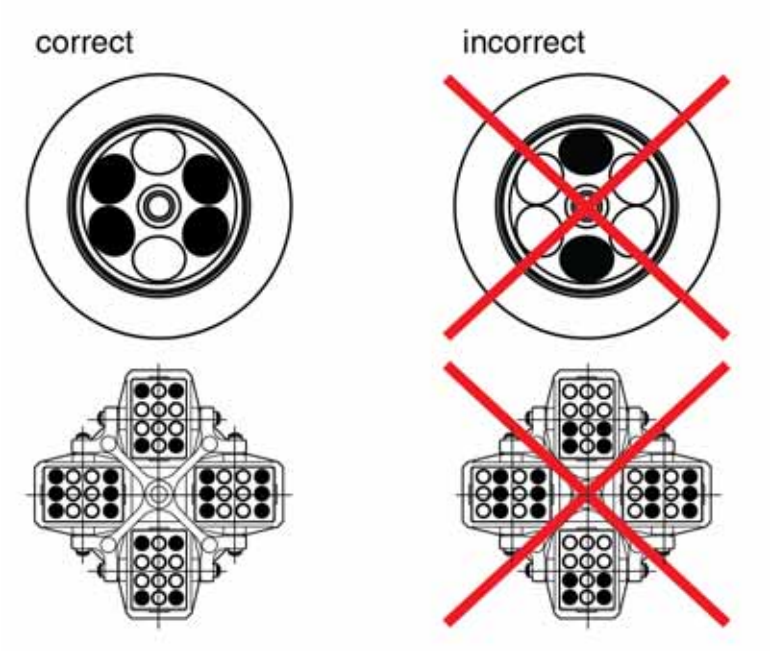

IMPORTANT Never load fixed-angle rotors with sample in only two opposing cell holes.

Glossary

Allegra V-15R — Allegra 3 Liter refrigerated centrifuge

Angular Velocity, ω — Rate of rotation, measured in radians per second.

$$\omega = \frac{2\pi \text{ rpm}}{60}$$

or

$\omega = 0.10472$ rpm

Anodized coating — A thin, hard layer of aluminum oxide formed electrochemically on aluminum rotor and/or accessory surfaces as a protective coating for corrosion resistance.

Autoclaving — Sterilization by heat (dry or steam).

Centrifugal Force — In a centrifugal field, the force which causes a particle to move away from the center of rotation.

Density — Mass per unit volume.

Erythrocytes — See RBC (red blood cells).

Fixed-angle rotor — A rotor in which the tubes are held at an angle (usually 20 to 45 degrees) from the axis of rotation.

IFU — Instructions For Use

IVD — *In Vitro* Diagnostic

***k* factor** — (clearing factor) Relative pelleting efficiency of the rotor at maximum rotation speed. As the *k* factor decreases, rotor efficiency increases.

$$k = \frac{2.53 \times 10^5 \times (r_{max} / r_{min})}{(\text{RPM}/1000)^2}$$

RCF — Relative centrifugal force; the ratio of the centrifugal acceleration at a specified radius and speed (rω2) to the standard acceleration of gravity (g) according to the following equation:

$$\text{RCF} = \frac{\text{r}\omega^2}{\text{g}}$$

where *r* is the radius in millimeters, ω is the angular velocity in radians per second (2π RPM/60), and *g* is the standard acceleration of gravity (9807 mm/s^2). Thus, the relationship between RCF and RPM is:

$$\text{RCF} = 1.12\text{r}\left(\frac{\text{RPM}}{1000}\right)^2$$

r_{av} — (Average radius) the position of the liquid in the tube at the average distance from the axis of rotation when the rotor is at speed.

r_{max} — (Maximum radius) the position of the liquid in the tube at the maximum distance from the axis of rotation when the rotor is at speed.

r_{min} — (Minimum radius) the position of the liquid in the tube at the minimum distance from the axis of rotation when the rotor is at speed.

RBC — Red blood cells, or erythrocytes, carry oxygen to the tissues and carbon dioxide to the lungs for exhalation.

Solution 555 — Beckman Coulter concentrated rotor cleaning solution; recommended because it is a mild solution that has been tested and found effective and safe for Beckman Coulter rotors and accessories.

Swinging bucket rotor — A rotor that holds removable buckets or carriers. The buckets and carriers are placed over pivot pins on the arms of the yoke; they swing out to a horizontal position during centrifugation.

Yoke — The aluminum structure that mounts on the centrifuge drive shaft and hold the buckets or carriers.

Beckman Coulter, Inc.
Allegra V-15R Rotors Warranty

Subject to the conditions specified below and the warranty clause of the Beckman Coulter, Inc., terms and conditions in effect at the time of sale, Beckman Coulter agrees to correct either by repair or, at its election, by replacement, any defects of material or workmanship which develop within seven (7) years after delivery of a benchtop centrifuge rotor to the original buyer by Beckman Coulter or by an authorized representative, provided that investigation and factory inspection by Beckman Coulter discloses that such defect developed under normal and proper use. Should a Beckman Coulter centrifuge be damaged due to a failure of a rotor covered by this warranty, Beckman Coulter will supply free of charge all centrifuge parts required for repair.

Conditions

Except as otherwise specifically provided herein, this warranty covers the rotor only and Beckman Coulter shall not be liable for damage to accessories or ancillary supplies including but not limited to (i) tubes, (ii) tube caps, (iii) tube adapters, or (iv) tube contents.

This warranty is void if the rotor has been subjected to customer misuse such as operation or maintenance contrary to the instructions in the Beckman Coulter rotor or centrifuge manual.

This warranty is void if the rotor is operated with a rotor drive unit or in a centrifuge unmatched to the rotor characteristics or operated in a Beckman Coulter centrifuge that has been improperly disassembled, repaired, or modified.

Thermoplastic rotors or components used in some benchtop centrifuges are warranted for one (1) year from date of purchase.

Disclaimer

IT IS EXPRESSLY AGREED THAT THE ABOVE WARRANTY SHALL BE IN LIEU OF ALL WARRANTIES OF FITNESS AND OF THE WARRANTY OF MERCHANTABILITY AND THAT BECKMAN COULTER, INC. SHALL HAVE NO LIABILITY FOR SPECIAL OR CONSEQUENTIAL DAMAGES OF ANY KIND WHATSOEVER ARISING OUT OF THE MANUFACTURE, USE, SALE, HANDLING, REPAIR, MAINTENANCE, OR REPLACEMENT OF THE PRODUCT.

Related Documents

Allegra V-15R Centrifuge
(IVD) Instructions For Use
PN C63131

Allegra V-15R Centrifuge
(non-IVD) Instructions For Use
PN C63130

Allegra V-15R Mobile Centrifuge Cart
Instructions For Use
PN C63225

Allegra V-15R Mobile Centrifuge Cart
Mobile Cart Safety Notice
PN C63374

Allegra V-15R Centrifuge
Pre-installation Guide
PN C63194

Allegra V-15R Centrifuge
Transport Safety Notice
PN C63370

Use and Care of Tubes and Bottles
PN IN-192

Chemical Resistances for Beckman Coulter
Centrifugation Products
PN IN-175

Available in hard copy by request.

Available at: www.beckman.com/techdocs

www.beckman.com

BECKMAN COULTER

© 2023 Beckman Coulter, Inc.
All Rights Reserved